STATIflo

Dynamic Leaders in Static Mixing

S-Type Mixers

Technical Information

In Stock

Ready to Dispatch

Mixing science with solutions

Statiflo
Dynamic Leaders in Static Mixing

Mixing Technology with Proven Benefits

Statiflo is a world leader in motionless mixing technology. We are constantly expanding the limits of motionless mixing technology to create innovative products including the most efficient static mixers currently available.

- ## Statiflo S-Type Motionless Mixers
  offer many key benefits for combining miscible and immiscible liquids. They are efficient and economical, delivering precise, predetermined results.

- Statiflo Motionless Mixers are maintenance free devices. Installation and operating costs are minimised. As well as direct operating savings, Statiflo Motionless Mixers deliver a high level of mixing efficiency, therefore the consumption of dosed chemicals and formation of by-products can be dramatically reduced. No straight pipe lengths upstream or downstream of the mixer are required. This means inline sampling can be performed immediately after the mixer – allowing any necessary adjustments to be made as quickly as possible – minimising potential product waste.

- Statiflo Motionless Mixers are installed in thousands of process plants worldwide, providing the highest standards of mixing efficiency, reliability and economy.

- The below image shows some examples of where Statiflo Motionless Mixers can be used in municipal water treatment processes.

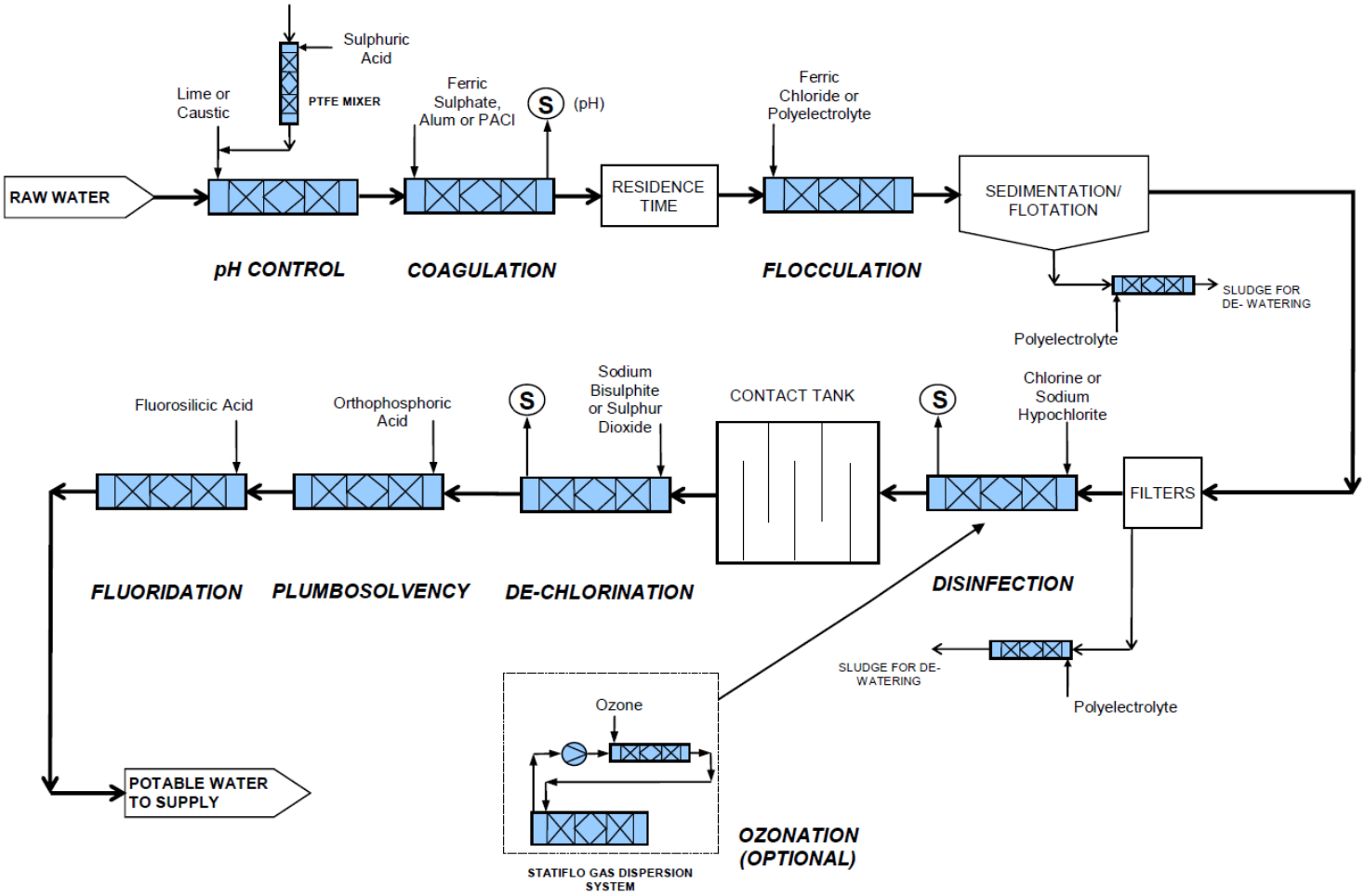

S-Type Mixers

Statiflo S-Type Motionless Mixers offer many key benefits for combining miscible and/or immiscible liquids. They are efficient and economical, delivering precise, predetermined results.

- **Statiflo S-Type Motionless Mixers** are a range of high quality, standard static mixers which are pre-fabricated and kept in stock ready for a quick dispatch.
- The S Type mixers are available in either all-stainless steel construction, complete with schedule 10s housing and RFSO flanges, or in a uPVC variant with a Pressure Class E housing complete with with stub end flanges and galvanised carbon steel backing rings.
- To complete the offer, each S Type mixer is supplied with a 1" BSP injection boss for chemical dosing.
- This range of mixers is perfect for water treatment, or other simple mixing applications.

Key benefits include:

- Highly efficient mixing
- No moving parts for maintenance-free operation
- Energy saving, as no direct power is required
- No need for tanks
- Ease of installation
- Minimal space requirement
- Simple to operate with no special training required
- Available worldwide through our Statiflo offices and representative network

Typical images of the Statiflo S-Type Mixer range

Dynamic Leaders in Static Mixing

Pressure drop information

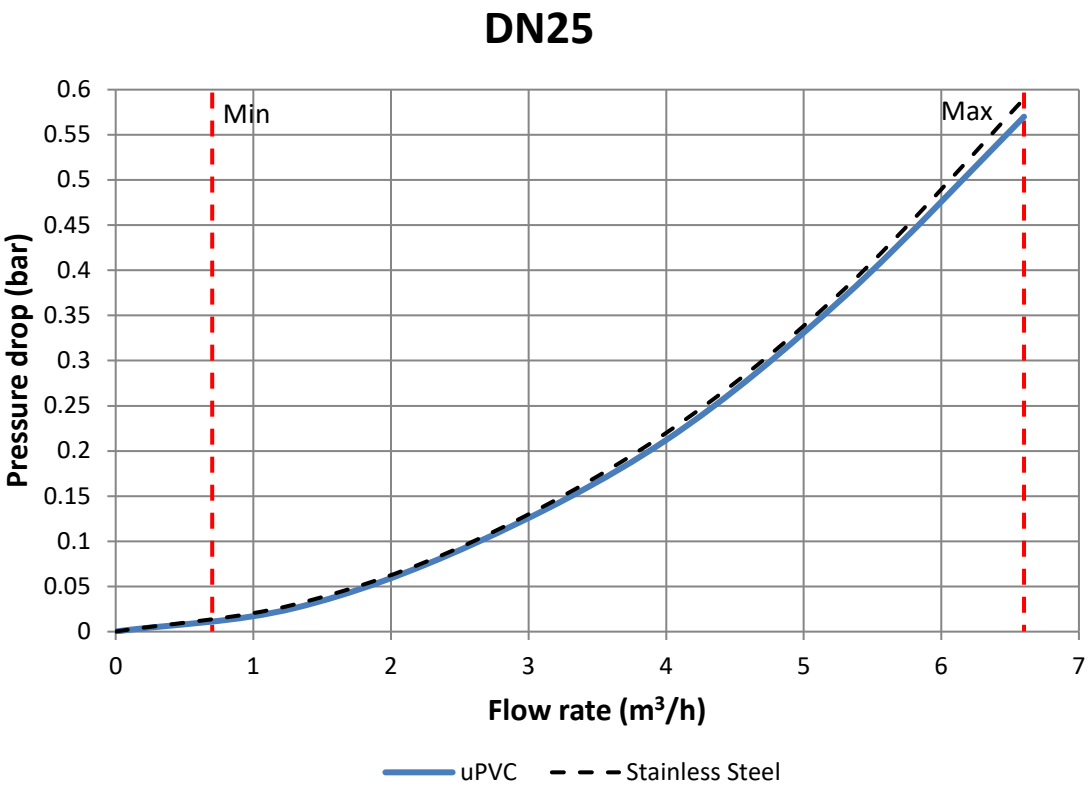

Notes

1) Mixers are designed for liquid/liquid miscible applications only.
2) Both sidestream and mainstream viscosities to be between 1 and 10 cP.
3) Maximum sidestream to mainstream volume ratio of 1:1000.
4) Mixer designed to achieve CoV < 0.05 within one pipe diameter of mixer discharge, subject to fully turbulent flow.
5) Minimum and maximum recommended flowrates are included on the graph above.
6) For alternative designs/applications please contact Statiflo directly.
7) Statiflo cannot accept responsibility for the selection of the materials of construction.
8) PED/UKCA: The Statiflo S-Type mixers are designed in accordance with Sound Engineering Practice (SEP) Category for non-hazardous liquid/liquid mixing applications. For any other application please contact Statiflo directly for review or quotation.

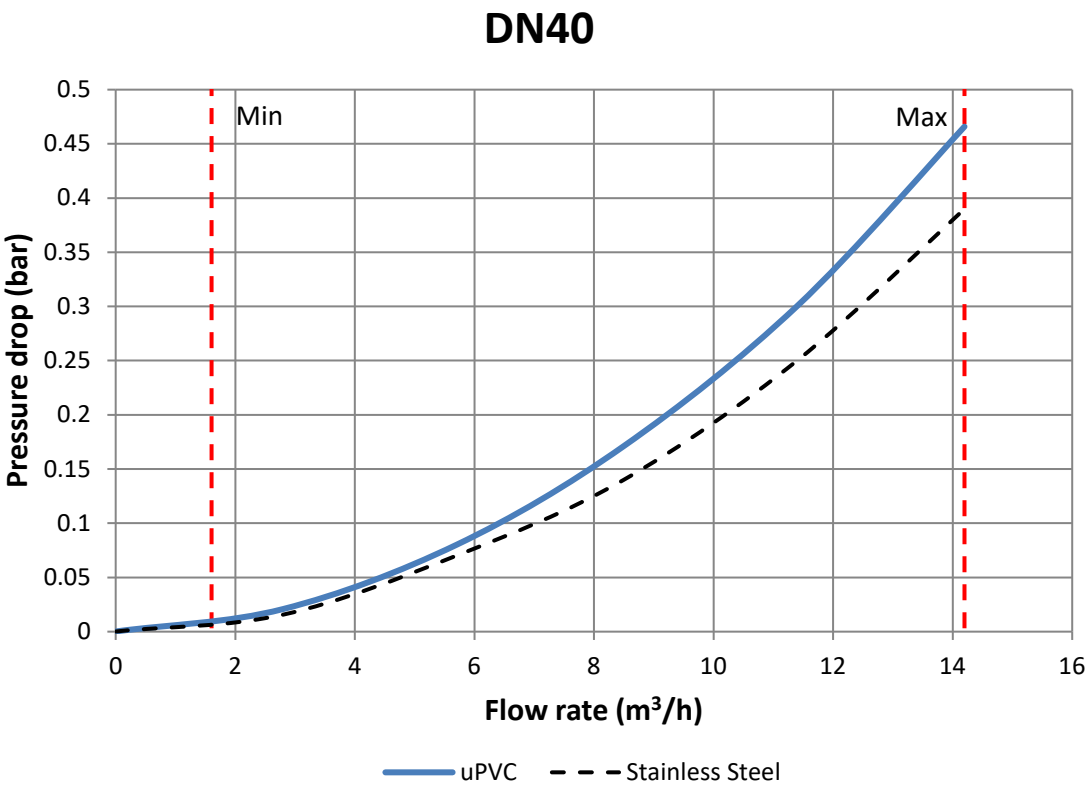

Notes

1) Mixers are designed for liquid/liquid miscible applications only.
2) Both sidestream and mainstream viscosities to be between 1 and 10 cP.
3) Maximum sidestream to mainstream volume ratio of 1:1000.
4) Mixer designed to achieve CoV < 0.05 within one pipe diameter of mixer discharge, subject to fully turbulent flow.
5) Minimum and maximum recommended flowrates are included on the graph above.
6) For alternative designs/applications please contact Statiflo directly.
7) Statiflo cannot accept responsibility for the selection of the materials of construction.
8) PED/UKCA: The Statiflo S-Type mixers are designed in accordance with Sound Engineering Practice (SEP) Category for non-hazardous liquid/liquid mixing applications. For any other application please contact Statiflo directly for review or quotation.

Dynamic Leaders in Static Mixing

Pressure drop information

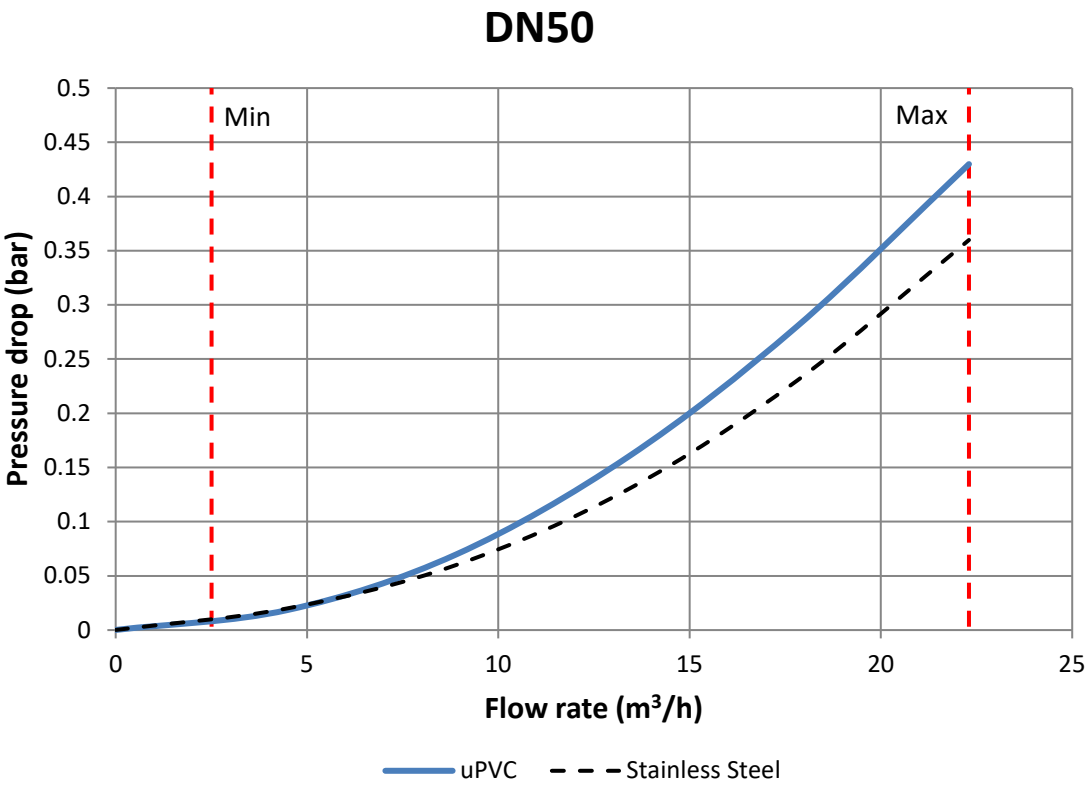

Notes

1) Mixers are designed for liquid/liquid miscible applications only.
2) Both sidestream and mainstream viscosities to be between 1 and 10 cP.
3) Maximum sidestream to mainstream volume ratio of 1:1000.
4) Mixer designed to achieve CoV < 0.05 within one pipe diameter of mixer discharge, subject to fully turbulent flow.
5) Minimum and maximum recommended flowrates are included on the graph above.
6) For alternative designs/applications please contact Statiflo directly.
7) Statiflo cannot accept responsibility for the selection of the materials of construction.
8) PED/UKCA: The Statiflo S-Type mixers are designed in accordance with Sound Engineering Practice (SEP) Category for non-hazardous liquid/liquid mixing applications. For any other application please contact Statiflo directly for review or quotation.

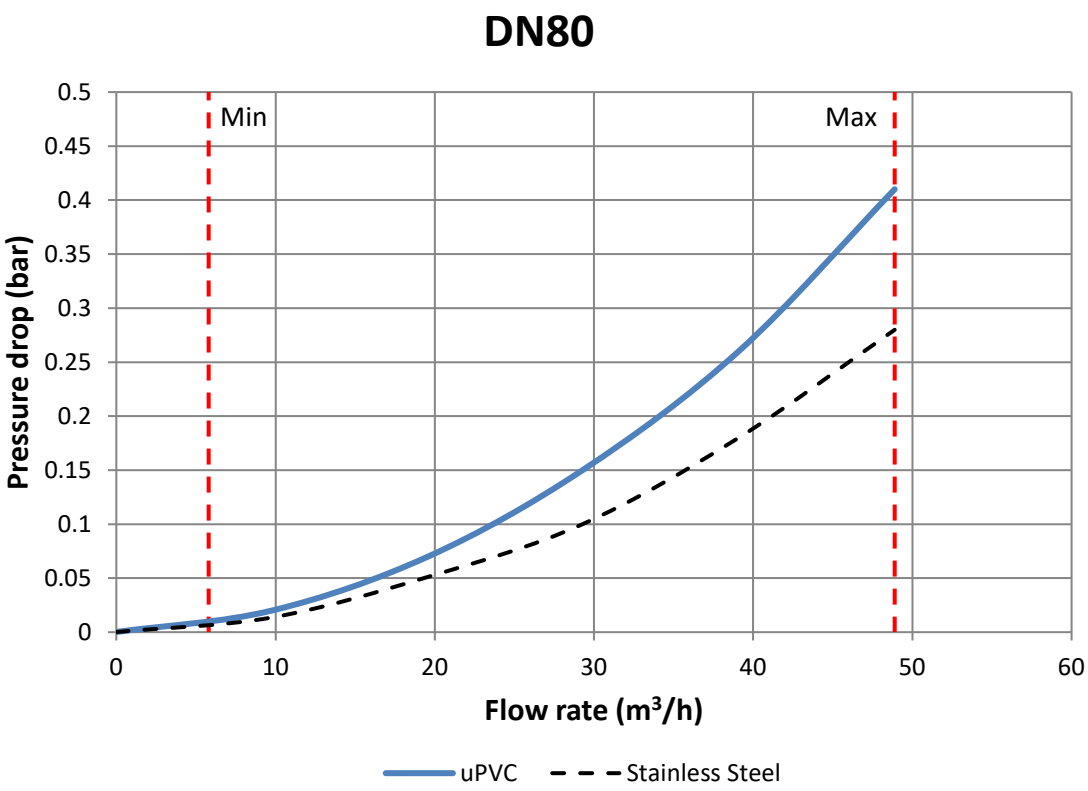

Notes

1) Mixers are designed for liquid/liquid miscible applications only.
2) Both sidestream and mainstream viscosities to be between 1 and 10 cP.
3) Maximum sidestream to mainstream volume ratio of 1:1000.
4) Mixer designed to achieve CoV < 0.05 within one pipe diameter of mixer discharge, subject to fully turbulent flow.
5) Minimum and maximum recommended flowrates are included on the graph above.
6) For alternative designs/applications please contact Statiflo directly.
7) Statiflo cannot accept responsibility for the selection of the materials of construction.
8) PED/UKCA: The Statiflo S-Type mixers are designed in accordance with Sound Engineering Practice (SEP) Category for non-hazardous liquid/liquid mixing applications. For any other application please contact Statiflo directly for review or quotation.

Dynamic Leaders in Static Mixing

Pressure drop information

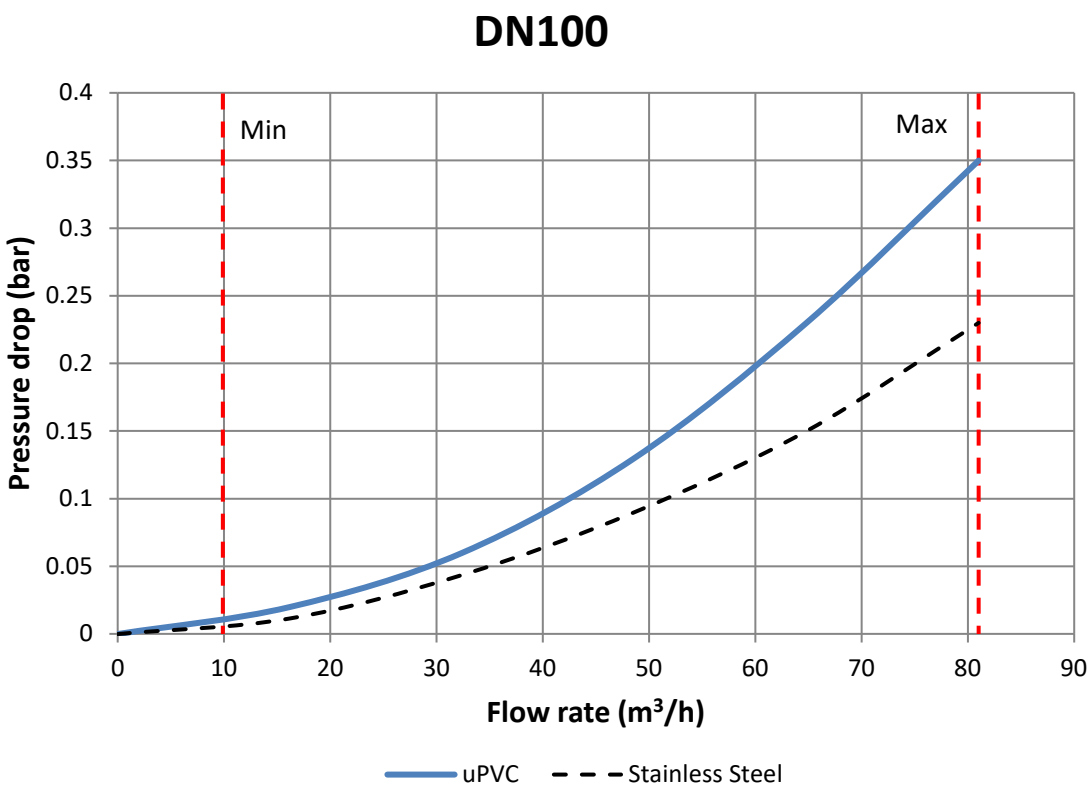

Notes

1) Mixers are designed for liquid/liquid miscible applications only.
2) Both sidestream and mainstream viscosities to be between 1 and 10 cP.
3) Maximum sidestream to mainstream volume ratio of 1:1000.
4) Mixer designed to achieve CoV < 0.05 within one pipe diameter of mixer discharge, subject to fully turbulent flow.
5) Minimum and maximum recommended flowrates are included on the graph above.
6) For alternative designs/applications please contact Statiflo directly.
7) Statiflo cannot accept responsibility for the selection of the materials of construction.
8) PED/UKCA: The Statiflo S-Type mixers are designed in accordance with Sound Engineering Practice (SEP) Category for non-hazardous liquid/liquid mixing applications. For any other application please contact Statiflo directly for review or quotation.

uPVC S-Type Mixers: Technical Information

Mixer Diameter	DN25	DN40	DN50
Number of Elements	4	4	4
Overall Length L (mm)	260	365	450
Injection Dimension A (mm)	75	100	115
Weight (kg)	1	3	4
Packing Dimensions (cm)	35 x 25 x 20	43 x 31 x 25	63 x 33 x 26

Mixer Diameter	DN80	DN100
Number of Elements	4	4
Overall Length L (mm)	595	730
Injection Dimension A (mm)	120	120
Weight (kg)	5	8
Packing Dimensions (cm)	63 x 33 x 26	78 x 38 x 30

Design Conditions for all items:
10 barg at 20°C

Housing and End Connections for all items:
- Housing: Pressure Class E uPVC
- End Connections: Stub end flanges and EN1092-1 PN10 galvanised carbon steel backing rings.

Technical Documentation:
- GA Drawing
- Certificate of Conformity
- Installation, Operation & Maintenance Manual

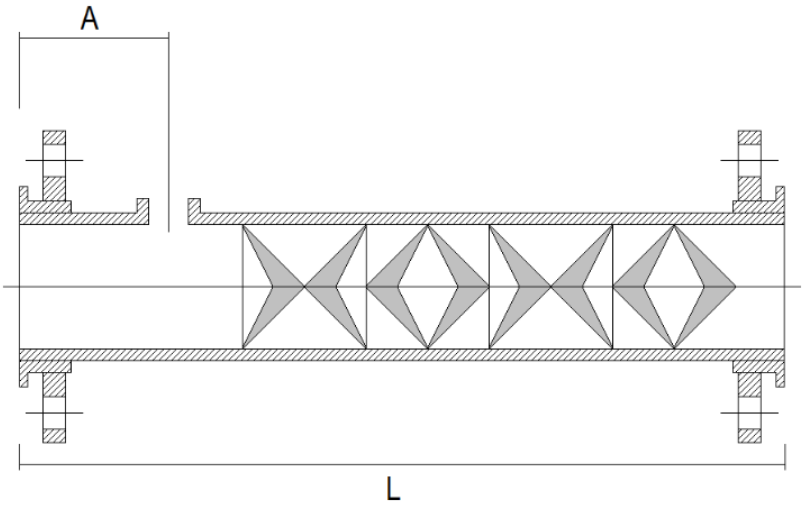

Dynamic Leaders in Static Mixing

Stainless Steel S-Type Mixers: Technical Information

Mixer Diameter	DN25	DN40	DN50
Number of Elements	4	4	4
Overall Length L (mm)	270	400	460
Injection Dimension A (mm)	65	90	90
Weight (kg)	3	6	8
Packing Dimensions (cm)	35 x 25 x 20	43 x 31 x 25	63 x 33 x 26

Mixer Diameter	DN80	DN100
Number of Elements	4	4
Overall Length L (mm)	610	770
Injection Dimension A (mm)	90	95
Weight (kg)	12	17
Packing Dimensions (cm)	63 x 33 x 26	100 x 25 x 35

Design Conditions for all items:
10 barg at 50°C

Housing and End Connections for all items:
- Housing: Schedule 10s 316 stainless steel
- End Connections: EN1092-1 PN10 RFSO Flanges

Technical Documentation:
- GA Drawing
- Certificate of Conformity
- Installation, Operation & Maintenance Manual

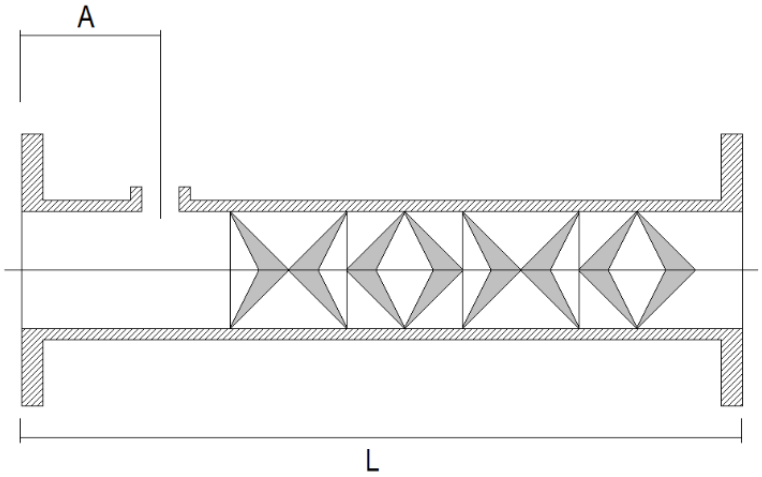

Static Mixer Sizing Questionnaire

Reference	
Date	
Item	
Quantity	
Initials	

Process Data

COMPONENT	MAIN FLOW	ADDITIVE 1	ADDITIVE 2	MIXTURE
Fluid Name				
Physical State				
Flowrate				
Viscosity, cP				
Density, kg/m^3				
Pressure, barg				
Temperature, ˚C				
Miscible System				
Interfacial Tension, dynes/cm - immiscible systems only				
Is the maxium Coefficient of Variation (CoV) of 0.05 required at the mixer discharge or 3-5 diameters downstream?				☐ Mixer Discharge ☐ 3-5 Diameters Downstream
Alternative CoV required (Please Specify)				

Mechanical Data

Pipe Diameter, mm				
Alternative Pipe Diameter, mm (if any)				
Maximum Pressure drop, bar				
Removable Elements?	Yes/No			
Injection Point(s)*	Yes/No*			
Sample Point(s)*	Yes/No*			
Sanitary Finish (Food/Pharmaceutical Applications)	Yes/No			
End Connections/Specification				
Housing Schedule				
Materials of Construction	☐ 316L Stainless Steel ☐ 304 Stainless Steel	☐ Carbon Steel ☐ PTFE Lined Pipe	☐ Polyethylene ☐ Polypropylene	☐ GRP ☐ uPVC
	Other (Please Specify)			
Design Code				
Operating/Design Temperature, ˚C				
Operating/Design Pressure, barg				
Heating/Cooling Jacket	Yes/No			
Special Painting				
Tests/NDE				
Other Data				

Brief Process Description with Flowsheet (if applicable)

*If injection and/or sample point(s) are required please sketch number, size and location.

Please return completed questionnaire to your local representative or Statiflo office

STATIflo
Dynamic Leaders in Static Mixing

Statiflo is the only international mixer specialist able to offer true global expertise. We have over 2,000 customers in more than 70 countries, in all process industries – endorsing our primary position in this field.

Dynamic Leaders in Static Mixing

Statiflo International Ltd
Wood Street
Macclesfield
Cheshire SK11 6JQ
UK

T: +44 (0)1625 433100
F: +44 (0)1625 511376
E: enquiries@statiflogroup.com

Statiflo GmbH
Auf der Voßwiese 2
51643 Gummersbach
Germany

T: +49 (0)2261 913570
F: +49 (0)2261 913580
E:enquiries@statiflogroup.com

Statiflo Corp
75 South Church St,
6th Floor
Pittsfield
MA 01201
USA
T: +1 (413) 684-9911
F: +1 (413) 464-8239
E: enquiries@statiflogroup.com

Statiflo has representatives throughout the world, to find one in your area, visit

www.statiflo.com