AM

Horizontal centrifugal pumps with magnetic coupling

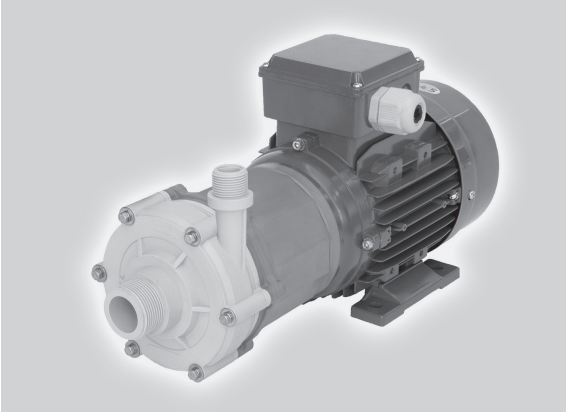

EN 02

Operating Manual

Read this operating manual before using the equipment.
To be retained for future reference.

Dosing | *Liquids*
Conveying | *Gases*
Control | *Systems*

Table of Contents

1. Safety risks 4
   1.1 Installation and commissioning personnel 5
   1.2 Operators and maintenance personnel 5
   1.3 Repair personnel 5
   1.4 Waste disposal 5
   1.5 Improper use 6
2. Identification codes 6
3. Usage to the intended purpose 6/7
   3.1 Operation in hazardous location or pumping flammable liquids 8
4. Operating principle 9
5. Motor 10/11
6. Pressure switch for the avoidance of dry running 11
7. Instructions on installation and use 12
   7.1 Transport 12
   7.2 Storage 12
   7.3 Installation 12/13
   7.4 Start-up 14
   7.5 Use 14
   7.6 Shutdown 15
8. Maintenance 15
   8.1 Disassembly 15/16
   8.2 Inspection 16
   8.3 Assembly 17
9. Repair 18
10. Traceability 18
11. Operating faults and possible causes 19
12. Technical data 20/21
13. Dimensions
   13.1 AM -IEC - 50/60 Hz (mm) 22/23
   13.2 AM -NEMA - 60 Hz (inch) 24/25
Declaration of Conformity 27

1. Safety risks

Warning! Magnetic fields.
Magnetic pumps contain some of the most powerful magnets in existence. The magnets are positioned on the back of the impeller and the outer magnet housing. The magnetic fields may adversely affect persons fitted with electronic devices (e.g. pacemakers and defibrillators): such persons must not be allowed to handle magnetic pumps and magnetic pump components.

Warning! Magnetic force.
Exercise extreme caution and follow instructions carefully during pump assembly/dismantling. Magnetic force attract (cause insertion of) internal and magnetic units, and are therefore a potential source of injury to fingers and hands.

Warning! Chemical hazard!
The pumps are designed to pump different types of liquid and chemical. Follow the specific instructions to decontaminate during inspection or maintenance.

Warning!
Safety risks for personnel mainly arise from improper use or accidental damages. These risks may be of an electrical nature as far as the non-synchronous motor is concerned and may cause injury to hands if working on an open pump. Risks may also arise due to the nature of the liquids pumped. It is therefore of utmost importance to closely follow all the instructions contained in this manual so as to eliminate the causes that may lead to pump failure and the consequent leakage of liquid dangerous for both personnel and the environment. Risks may also arise from improper maintenance or dismantling practices.

In any case five general rules are important:

A) all services must be carried out by specialised personnel or supervised by qualified personnel depending on the type of maintenance required.

B) Install protection guards against eventual liquid sprays (when the pump is not installed in remote areas) due to an accidental pipe rupture. Arrange for safety basins to collect possible leakage.

C) When working on the pump always wear acid-proof protective clothing.

D) Arrange for proper conditions for suction and discharge valve closing during disassembly.

E) make sure that the motor is completely disconnected during disassembly.

Proper design and building of the plants, with well positioned and well marked piping fitted with shut-off valves, adequate passages and work areas for maintenance and inspections are extremely important (since the pressure developed by the pump could give some kind of damage to the plant in case this one should be faulty made or wear and tear-damaged).

It must be stressed that the major cause of pump failures leading to a consequent need to intervene is due to the pump running dry in manually operated plants. This is generally due to:

- the suction valve being closed at start-up or
- the suction tank being emptied without stopping.

1.1 Installation and commissioning personnel

Interventions allowed only to specialised personnel who may eventually delegate to others some operations depending on specific evaluations (technical capability required: specialisation in industrial plumbing or electric systems as needed).

1.2 Operators and maintenance personnel

Interventions allowed to general operators (after training on the correct use of the plant):

- pump starting and stopping
- opening and closing of valves with the pump at rest
- emptying and washing of the pump body via special valves and piping
- cleaning of filtering elements

Interventions by qualified personnel (technical capacities required: general knowledge of the mechanical, electrical and chemical features of the plant being fed by the pump and of the pump itself):

- verification of environmental conditions
- verification of the condition of the liquid being pumped
- inspections of the control/stop devices of the pump
- inspections of the rotating parts of the pump
- trouble shooting

1.3 Repair personnel

Interventions allowed to general operators under the supervision of qualified personnel:

- stopping of the pump
- closing of the valve
- emptying of pump body
- disconnection of piping from fittings
- removal of anchoring bolts
- washing with water or suitable solvent as needed
- transport (after removal of electrical connections by qualified personnel)

Interventions by qualified personnel (technical capacities required: general knowledge of machining operations, awareness of possible damage to parts due to abrasion or shocks during handling, know-how of required bolt and screw tightening required on different materials such as plastics and metals, use of precision measuring instruments):

- opening and closing of the pump body
- removal and replacement of rotating parts

1.4 Waste disposal

Materials: separate plastic from metal parts. Dispose of by authorized companies.

1.5 Improper use

The pump must not be used for purposes other than the transfer of liquids.
The pump cannot be used to generate isostatic or counter pressures.
The pump cannot be used to mix liquids generating an exothermal reaction.
The pump must be installed horizontally on a firm base.
The pump must be installed on a suitable hydraulic plant with inlet and outlet connections to proper suction and discharge pipes.
The plant must be able to shut off the liquid flow independently from the pump.
Handling of aggressive liquids requires specific technical knowledge.

2. Identification codes

Each pump is supplied with the serial and model abbreviation and the serial number on the type label, which is riveted onto the support side. Check these data upon receiving the goods. Any discrepancy between the order and the delivery must be communicated immediately.
In order to be able to trace data and information, the abbreviation, model and serial number of the pump must be quoted in all correspondence.

3. Usage to the intended purpose

“AM” pumps are designed and built for the transfer of liquid chemical products having a specific weight, viscosity, temperature and stability of state appropriate for use with centrifugal pumps in a fixed installation, from a tank at a lower level to a tank or a pipe to a higher level. The characteristics of the liquid (pressure, temperature, chemical reactivity, specific weight, viscosity, vapour tension) and the ambient atmosphere must be compatible with the characteristics of the pump and are defined upon ordering.

The max. pump’s performances (capacity, head, rpm) are defined on the identification plate.

"AM" pumps are centrifugal, horizontal, single stage, coupled to a non-synchronous electric motor via a magnetic coupling, with axial inlet and radial outlet for connection to the hydraulic system. They are foot-mounted for floor fixing.

„AM” pumps are not self priming.
R execution “AM” pumps can occasionally run dry. Other versions are not suitable for dry running.
The liquid to be pumped must be clean for the R execution, the X execution may contain solid (%, dimension and solid part hardness must be agreed during the offer).
Clockwise rotation seen from the motor side.

Make sure that the chemical and physical characteristics of the liquid have been carefully evaluated for pump suitability.

The specific weight that can be pumped at a temperature of 25°C (both of the ambient and of the liquid) depends upon the impeller diameter (shown on the identification plate) and of the type of construction.

Standard construction N	1.05 kg/dm³
Powered construction P	1.35 kg/dm³
Strong-powered construction S	1.80 kg/dm³

The specific weight that can be pumped at 70°C is 10% less than that at 25°C.
The level of kinematic viscosity must not exceed 40 cSt so as not to significantly modify the pump`s performance. Higher values up to amaximum of 100 cSt are possible provided that the pump is equipped with suitable impeller to be defined upon ordering.

The maximum continuous working temperature referred to water as well as the admissible ambient temperature depend on the choice of materials (specified on the identification plate):

Execution	WR	GF	GX
Operating temperature	-5 up to +80°C	-20 up to +100°C	-20 up to +100°C
Ambient temerpature	0 up to +40°C	-20 up to +40°C	-20 up to +40°C

The maximum pressure the pump may be subjected to is 1.5 times the head value developed with the outlet closed.

The vapour pressure value of the liquid to be pumped must exceed (by at least 1m wc) the difference between the absolute total head (suction side pressure added to the positive suction head, or subtracted by the suction lift) and the pressure drops in the suction side piping (including the inlet NPSHr drops shown on the specific tables).

The pump does not include any non return valve nor any liquid flow control or motor stop device.

3.1 Operation in hazardous location or pumping flammable liquids

Danger!
Operation in hazardous location or pumping flammable liquids can cause explosion resulting in severe injury or death. Use for this application only pumps of version GX with the identification II 2G T4. The identification for Ex-protection on the pump only refers to the hydraulic parts. Following must be observed:

- During operation of the pump the internal space must be permanently filled with liquid to prevent that an explosive atmosphere can arise. For the start up after the filling make sure that the pumps starts to deliver right now after the starting process and that the gas which is still remaining in the internal space is exhausted. Provide respective control equipment in case this cannot be guaranteed.
- Observe the limits for operating and ambient temperature.
- Check the chemical compatibility of the liquid being pumped with the sealing components of the pump in order to prevent an emission of explosive gases.
- Use an inlet filter. The liquid being pumped may contain max. 5% of particles. These particles are not allowed to be solid, adhesive, abrasive or of greater size than 0.1 mm. Only a small amount of particles up to a size of 0.5 mm is allowed.
- Provide an equipotential bonding at the pump. Connect the equipotential bonding cable onto the earthing terminal outside of the motor housing.
- The pump is not allowed to run dry. This must be secured by using a level control, a flow control or a pressure switch.
- Use instruments for controlling the leakage. In case of leakage stop the pump. Observe leakage at the subsurface of the pump.
- Do not operate the pump at the capacity limits of the performance curve.
- Do not operate the pump with closed gate valves in suction and/or pressure line.
- The pump may not be exposed to water hammer.
- The pressure at the inlet or discharge side of the pump may not exceed the 1.5-fold value of that the pump creates with a closed outlet.
- Before start up check the rotating direction of the pump in order to prevent that temperature exceeds due to dry running. Check the rotating direction when the hydraulic parts are disconnected, if no liquid is available.
- Observe the instructions for maintenance, dismantling and assembly.
- When reassembling the pump always change O-rings, V-rings and seal-rings.

4. Operating principle

HYDRAULICALLY alike to all centrifugal pumps, it is equipped with a blade-type impeller rotating within a fixed housing. It has a tangential outlet (or radial with an internal deflector) and, by creating a depression in the center, it allows the liquid to flow from the central suction side. Then, flowing through the impeller's blades, the fluid acquires energy and is conveyed towards the outlet.

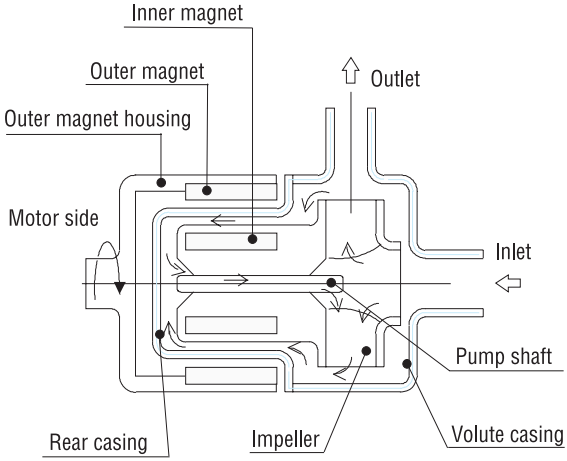

MECHANICALLY different from the traditional centrifugal pumps in the impeller motion drive thanks to the magnetic field created between the primary outer magnet and the inner magnet (not visible because housed inside the impeller hub). The magnetic field crosses the plastic parts and the liquid, and firmly couples the two magnet assemblies. When the motor causes the outer magnet to rotate together with its housing, the inner magnet assembly is dragged at the same speed. As a result the impeller, which is integral to it, is maintained in rotation.

The SHAFT, totally within the housing, is not involved in the transmission of rotary motion; its only function is to act as a centering guide and support for the impeller. To this end the components are designed so that a spontaneous cooling circuit (due to a simple effect of pressure) is established to cool the surfaces subject to friction. Periodic inspections prevent the build-up of sediments between the shafts and the guide bushes significantly lengthening their working life.

5. Motor

Electrical connections
The electrical connection to the motor terminal determines the direction of rotation of the motor and can be verified by looking at the cooling fan at the rear of the motor (for the AM pump this has to rotate clockwise looking at the front end).

With single phase motors the direction of rotation may be reversed by changing the position of the connection plates:

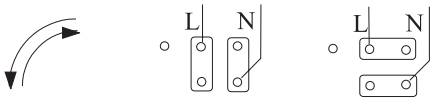

With three-phase motors the direction of rotation may be changed by swapping any two of the three conductors independently of the type of connection to the windings:

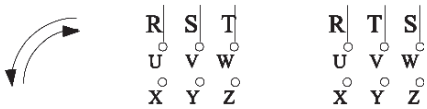

The windings of three-phase motors (e.g. with (a) 230-400 V; (b) 400-690 V) require a delta-connection for lower voltage (230 volts for a ; 400 volts for b).

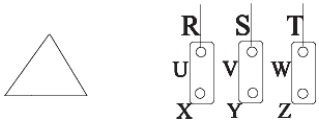

They require a star-connection for higher voltage (400 volts for a; 690 volts for b).

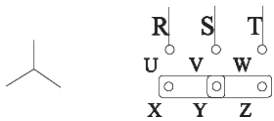

Star/Delta starting is used when the motor power is above 7.5 kW (10 HP) only in case of frequent starts and short running times, but always when the motor power is above 15kW (20 HP). All this is also to safeguard the structure of the pump.

Protection level
The initials IP are followed by two numbers:

The first number indicates the level of protection against penetration of solid objects and in particular:

4 for solids whose dimension is greater than 1mm

5 for dust (eventual internal deposits will not harm operation)

6 for dust (no pentetration)

The second number indicates the protection against the penetration of liquids. In particular:

4 for water sprays from all directions

5 for jets of water from all directions

6 for tidal and sea waves

According to the IP protection indicated on the identification plate of the motor and to the environmental conditions, arrange for opportune extra protections allowing in any case correct ventilation and rapid drainage of rainwater.

6. Pressure switch for the avoidance of dry running

The main reason for operational malfunctions of pumps is dry running. This is caused by improper use or cavitation. We recommend the installation of a device that switches the pump off if the pressure falls below a preset value. This is usually caused when there is insufficient flow at the impeller for various reasons:

- Lack of fluid
- The valve on the suction side is closed when the pump starts up
- Cavitation
- Clogged lines
- Soiled filter, etc.

The pressure switch (pressure measuring device with electrical contacts) must be mounted on the pressure side approximately 20 cm after the pump outlet. This device also requires:

1) A pressure transmitter, which transfers the pressure from the measuring liquid to the pressure switch by means of a chemical-proof membrane and a transmission liquid.
2) An On-Off button combination for the remote control of the motor. The N/C contact of the pressure switch is switched in series for the self-retaining function of the On-Off button combination.

Set the switching point of the pressure switch to 65% of the operating pressure in order to prevent pressure fluctuation. You cannot use this device to control the operating pressure.
The N/C contact of the pressure switch must be bridged during the start-up of the pump until operating pressure has been reached. In the case of an automatic start-up, the self-retaining function must be bridged by a time switch until operating pressure has been reached.
This system cannot be used to switch large loads. Use control devices that are suitable for the power consumption of the motor.
All measures described above must correspond with the local safety regulations. This particularly applies if explosion-protected operating equipment is in the vicinity.

7. Instructions on installation and use

7.1 Transport

- cover the hydraulic connections
- when lifting the unit do not exert force on the plastic fittings
- lay the pump on its base or fixing plate during transport
- if the road is particularly rough, protect the pump by means of adequate shock absorbing supports
- bumps and shocks may damage important working parts vital for safety and functionality of the machine

7.2 Storage

- Leave the pump in its original packaging if it needs to be stored prior to installation. The packaged pump must be stored in a closed, clean and dry environment.
- If the packaging of the pump is damaged upon delivery, then check that the pump is undamaged. Use new packaging for further storage.
- Store the pump at an ambient temperature between -5°C and 40°C and a humidity of less than 80%. The packaged pump may not be exposed to impacts, vibrations and loads.

7.3 Installation

- Clean the plant before connecting the pump.
- Make sure that no foreign bodies are left in the pump. Remove safety caps on the hydraulic connections.
- Follow the instructions indicated in the following diagram:

1) Suction head varies according to flow in order to prevent windage (min. 0.5 m, max. 15% of pump head).
2) YES: expansion joint (indispensable with long pipes or hot liquids) and/or anti-vibration facility during discharge and suction; anchored near to pump.
3) YES: attachment for gauge or safety pressure switch
4) YES: check valve (especially for long vertical or horizontal pipes; compulsory with parallel pumps).
5) YES: adjusting gate valve on outlet.
6) Speed of delivered fluid: 3.5 m/s max.
7) NO: elbow joints (and other parts) on the pump (discharge and suction lines)
8) YES: drainage channel around base.
9) Fix the pump by the fixing holes provided: the supports must be level.
10) YES: pipe discharge (completely sealed), discharge valve shut during normal operations.
11) YES: pipe fixing parts
12) Provide a leak-tight drainage pit.
13) Fluid speed suction: 2.5 m/s
14) NO: air pockets: the circuit must be short and straight.
15) With positive head: tilt of piping towards pump.
16) With negative suction lift: tilt of piping towards suction tank.
17) YES: check valve (with negative suction lift)
18) YES: gate valve (may also be near pump in the case of long piping)

19) Use a strainer (3-5 mm mesh) against impurities.
20) Use a strainer (3-5 mm mesh) against impurities.
21) Suction head, 3 m max.
22) Immersion depth: 0.3 m min.
23) YES: overcoming obstacles at lower depths.

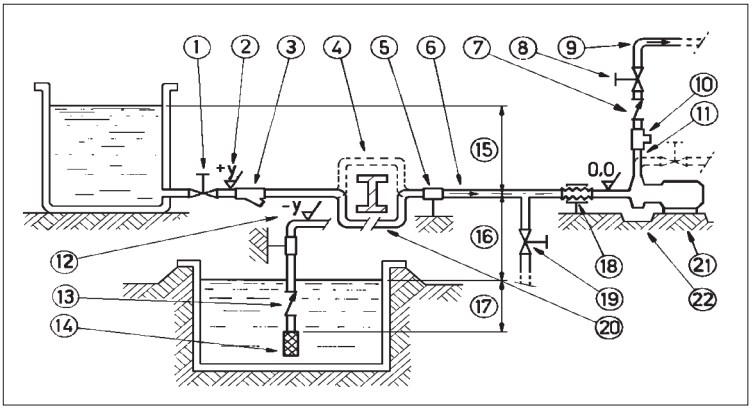

- Anchor the pump to an adequate base plate having a mass at least 5 times that of the pump.
- Do not use anti-vibration mounts to fix the pump.
- Anti-vibration joints are recommended on the pipe connections.
- Manually verify that all rotating parts are free to turn without abnormal friction by turning the motor cooling fan.
- Make sure that the power supply is compatible with the data shown on the pump motor identification plate.
- Connect the motor to the power supply via a magnetic/thermal control switch.
- Install emergency stop devices to switch off the pump in case of low liquid level (floating, magnetic, electronic, pressure- sensitive).
- Ambient temperature as a function of the physical-chemical characteristics of the liquid to be pumped and in any case not greater or lower than the interval indicated in the field of application.
- Other environmental conditions in accordance with the IP protection of the motor.
- Install a drainage pit to collect any liquid overflow from the base drainage channel due to normal maintenance work.
- Leave enough free space around the pump for a person to move.
- Leave free space above the pump for lifting operations.
- Highlight the presence of aggressive liquids with coloured tags following the local safety regulations.
- Do not install the pump (made in thermoplastic material) in close proximity to heating apparatus.
- Do not install the pump in areas subject to solid or liquid matter falling.
- Do not install the pump in an explosive atmosphere unless the motor and its coupling have been adequately pre-arranged
- Do not install the pump in close proximity to workplaces or crowded areas.
- Install extra protection guards for the pump or persons as the need arises.
- Install a spare equivalent pump in parallel.

7.4 Start-up

- Verify that the instructions outlined in the INSTALLATION have been followed.
- Verify the correct direction of rotation (clockwise from the motor side) supplying the motor with short impulses
- Ensure that the NPSH available is greater than that required by the pump (in particular for hot liquids, liquids with high vapour pressure, very long suction pipes or negative suction lift).
- Close the drain valve; totally flood the suction pipe and the pump.
- Close the discharge valve. Briefly start the motor two or three times to bleed the pump and the lubrication circuit between the guide shaft and the socket.
- Start the pump with the suction valve completely open and the discharge valve partially closed.
- Slowly regulate the flow by opening or closing the discharge valve (never the suction valve). Make sure that the power absorbed by the motor does not exceed the rated one indicated on the motor identification plate.
- Do not operate the pump at the limit values of its performance curve: maximum head (discharge valve excessively closed) or maximum capacity (total absence of drops and geodetic head on the discharge side).
- Set the operating point to that for which the pump was requested.
- Ensure that there are no abnormal vibrations or noise due to inadequate mounting or cavitation.
- Avoid short and/or frequent starts by properly setting the control devices.

Motor power	kW	0,75 - 5,5	7,5 - 30	37 - 110	132 - 200	250 - 315
Max. no. starts/ hour	2 / 4 poles	20 - 40	10 - 20	6 - 12	2 - 4	1 - 2

- Ensure that the temperature, pressure and liquid characteristics are as those specified at the time of order.
- **Warning!** At the start-up be sure that all the internal hyfraulic parts are not in anti-clockwise rotation. The cooling fan of the motor must stand or rotate clockwise to prevent decoupling among magnetic driven parts of the pump. Add a non-return valve in the plant if the anti-clockwise rotation is due to the feedback of the liquid in the discharge side.

7.5 Use

- Switch automatic control on.
- Do not activate valves whilst the pump is in operation.
- Risks of dangerous water hammer effects in case of sudden or improper valve actuation (only trained personnel should operate valves).
- Completely empty and wash the pump before using a different liquid.
- Isolate or empty the pump if the crystallization temperature of the liquid is the same or lower than the ambient temperature.
- Stop the pump if the liquid temperature exceeds the maximum allowed temperature indicated in the general notes; if the increase is of approximately 20%, check internal parts.
- Close the valves in case of leaks.
- Wash with water only if compatible from the chemical point of view. As alternative use an appropriate solvent that will not generate dangerous exothermal reactions.
- Contact the liquid supplier for information on the appropriate fire precautions.
- Empty the pump in case of long periods of inactivity (in particular with liquids which would easily crystallize).

7.6 Shutdown

- Disconnect the motor
- Before starting maintenance, turn off the suction and discharge valves

8. Maintenance

All maintenance operations must be performed under the supervision of qualified personnel.

- Make periodic inspections (2 to 6 months depending on the type of liquid and the operating conditions) on the rotating parts of the pump; clean or replace as necessary.
- Make periodic inspections (3 to 5 months depending on the type of liquid and the operating conditions) on the functionality of the motor control system; efficiency must be guaranteed.
- Make periodic inspections (2 to 30 days depending on the type of liquid and the operating conditions) of the in- line and foot filters as well as of the bottom valve.
- The presence of liquid below the pump could be a clue to pump problems
- Excessive current consumption could be an indication of impeller problems
- Unusual vibrations could be due to unbalanced impeller (due to damage or presence of foreign material obstructing its blades).
- Reduced pump performance could be due to an obstruction of the impeller or damages to the motor.
- Motor damages could be due to abnormal friction within the pump.
- Damaged parts must be replaced with new original parts.
- The replacement of damaged parts must be carried out in a clean and dry area.

8.1 Disassembly

- Tools required: size 8 socket spanner, cross cogging screw driver, punch ø < 4mm. Bolts have right-hand thread.
- All maintenance operations must be performed under the supervision of qualified personnel.
- Cut off the power supply from the motor and disconnect the electrical wiring; pull the wires out from the terminal box and isolate their extremities accordingly.
- Close the suction and discharge valves and open the drain valve.
- Use gloves, safety glasses and acid-proof overalls when disconnecting and washing the pump.
- Disconnect the piping and leave enough time for the residual liquid to exit the pump body and atmospheric air to fill the empty volume.
- Wash the pump before carrying out any maintenance work.
- Do not scatter the liquid in the environment.
- Before attempting to dismantle the pump ensure that its motor is disconnected and that it may not be started accidentallly.
- Before the inspection, check that you have spare O-rings ready to hand for re-installing at the end of operations.
- **Warning!** Operations near the magnet attract the tools. Proceed with caution to avoid damage.
- During the dismantling take the pump in vertical position (inlet side up).

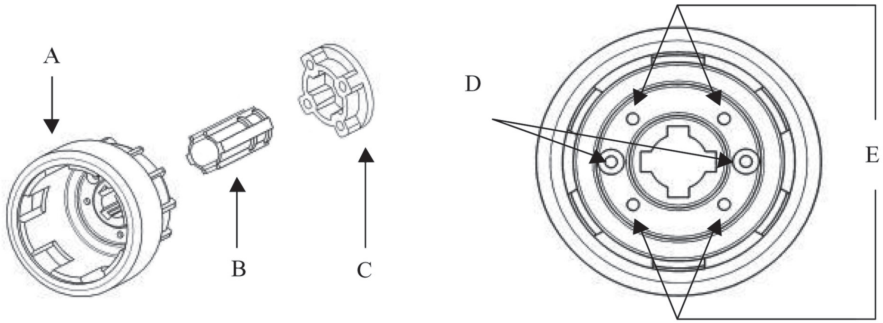

- Now open the pump following the sequence indicated in the respective table of the LEGEND. The separation between the volute casing – impeller – rear casing is carried out by simply unscrewing the six M5 screws, take care during the operation to not damage the Al2O3 or SiC components.
- After removing the rear casing we reach the drive magnet assembly where we can see 4 cross cogging screws, after unscrewing the 4 screws **(pos. E in pic.)** we have to inser the punch in the hole **(pos. D in pic.)** to extract the collar **(pos. C in pic.)** from the drive magnet assembly tang.
- After removing the collar we can unthread drive magnet assembly, sockets and collar **(pos. A, pos.B, pos. C in pic.)** from the motor shaft.

8.2 Inspection

Check:

- the pump shaft for cracks and excessive wear
- guide bushing for excessive wear(≅ 5 %)
- counterthrust bushing for cracks or excessive wear
- pump shaft clutch
- that the guide bushing cooling circuit is not blocked
- the impeller, volute and rear chamber for abrasion and corrosion
- that the pressure balancing holes on the impeller blades are not blocked
- for lumps and clusters created by the pumped liquid (especially at the bottom the rear chamber)
- for infiltration of liquid into the chamber containing the inner magnets
- abrasions on the outside surface of the rear chamber due to scratching of the outer magnets

Replace broken, cracked or deformed parts
Reopen all the blocked pipes and eliminate any chemical agglomeration l
Clean all the surfaces before re-assembly, especially the O-ring seats (risk of drip leaks).

8.3 Assembly

Danger!
Operation in hazardous location or pumping flammable liquids can cause explosion resulting in severe injury or death. Do not install damaged parts. To prevent sparks due to mechanical contact the rotating parts must be correctly assembled and checked for functional efficiency.

- Tools required: size 8 socket spanner, screw driver (Phillips drive type)
  Bolts have right-hand thread.

Bolt torque setting in Nm (reduce by 25% on plastic parts)	M4	M6	M8	M10
	4	14	24	25

- All these maintenance operations must be performed under the supervision of qualified personnel.
- Before the inspection, check that you have spare O-rings ready to hand for re-installing at the end of operations.
- Now open the pump following the sequence indicated in the respective table of the spare-parts list.

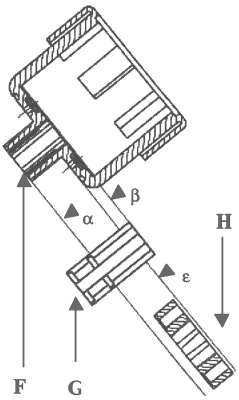

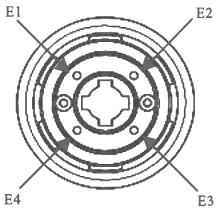

Insert possible sockets (pos. G in pic.) into the drive magnet assembly tang (pos. F in pic.). The relative position between the drive magnet assembly and the sockets is shown by the α- and β - plans in the picture.

Insert the collar (pos. H in pic.) on the drive magnet assembly tang, the collar side where are visible brass inserts have to be located to the pump side and as far as possible from the ε plan.

Insert the assembly group (drive magnet assembly, sockets, collar) on the motor shaft (during the group insertion verify that the relative position between the sockets and the drive magnet assembly remain the same), the sockets (pos. G) and drive magnet assembly (pos. F) must be located as shown in the picture.

screw the 4 cross cogging screws sharing the oparation in more than one phase, repeat the sequence E1, E2, E3, E4 (torque $\cong$ 6 nm).
Do not insert the impeller freely into the drive magnet assembly.

During the impeller insertion take care not to damage the (Al2O3- SiC-C HD) components.

9. Repair

Repairs should only be made by the manufacturer or authorized Lutz-dealers. Only use original Lutz spare parts.
Before sending back the appliance, following must be observed:

- Residuals in the appliance can cause danger to the environment and human health. The appliance must be completely emptied, rinsed and cleaned.
- Please advise which liquid has been pumped. A respective safety data sheet must be attached to the return consignment.

10. Traceability

Products manufactured by Lutz Pumpen for potentially explosive atmospheres are identified by an individual batch number which allows them to be traced. This number provides the year of construction and the design of the equipment.
This product is an appliance for potentially explosive atmospheres. In this regard and in compliance with the EC ATEX 94/9 Directive, provisions must be made to ensure ascending and desccending traceability.
Our ATEX notified quality system ensures this traceability up to the initial point of delivery.
Except as otherwise agreed in writing, anyone that guarantees to redeliver said equipment undertakes to put in place a system that allows for equipment that is not conform to be recalled if necessary.

11. Operating faults and possible causes

Pump does not deliver:

1. rotates in wrong direction
2. suction pipe is excessively long and tortuous
3. insufficient geodetic pump head or excessive suction geodetic lift
4. air infiltration into the suction pipe or branches
5. pump or suction pipe not completely covered by liquid
6. impeller channels blocked by impurities
7. check valve on discharge pipe jammed
8. geodetic system height is greater than maximum potential pump head
9. impeller jammed by considerable layer of crystals or by melting of materials for dry rotation
10. bottom valve blocked by mud or other debris
11. bottom valve insufficiently immersed
12. bottom valve faulty, thereby causing suction valve to empty when pump stops
13. magnets release a much greater specific weight and flow rate of liquid than planned
14. magnets release during start-up while the impeller is moving anti-clockwise (feed-back of the liquid in the discharge side).

Pump discharge rate or pressure insufficient:

see 01, 02, 03, 04, 05, 06, 10, 11, 12, 13

15. system`s resistance head is greater than expected
16. suction pipe, closing valve and other items have an insufficient nominal diameter
17. small geodetic pump suction head
18. damaged or worn impeller
19. liquid viscosity greater than expected
20. excessive quantities of air or gas in liquid
21. elbow joints, check valves or other items on the outlet port
22. liquid (especially if hot) with tendency to change into gaseous state

Pump absorbs too much power:

see 19

23. pump operates at greater capacity than expected
24. specific weight of liquid is greater than expected
25. impurities inside pump create abnormal wear
26. electric motor supply voltage is not rated voltage

Pump vibrates and is noisy:

see 25

27. operates at full capacity (no head)
28. pump or pipes inadequately fixed
29. eccentric impeller operation because of worn bushes

Pump's internal parts wear out too quickly:

see 25

30. liquid excessively abrasive
31. recurring cavitation problems (see 02, 15, 19, 17)
32. high tendency of liquid to crystallise or polymerise when pump is not operating
33. pump made of materials that are unsuitable for pumped liquid
34. operation with capacity too reduced

12. Technical data

AM		Model	04.04			04.08			06.08			06.10		
		Execution	N	P	S	N	P	S	N	P	S	N	P	S
Power		kW	0,18	0,25	0,37	0,25	0,37	0,55	0,37	0,55	0,75	0,55	0,75	1,1
		Hp	0,25	0,34	0,5	0,34	0,5	0,75	0,5	0,75	1	0,75	1	1,5
Frame		IEC	63A	63B	71A	63B	71A	71B	71A	71B	80A	71B	80A	80B
		NEMA	-	-	-	-	-	-	-	-	-	-	-	-
Voltage standard		V (IEC)	400 ± 5% 50 Hz											
		V (NEMA)	-											
Phase		N°	3 phase / 1 phase											
Protection level		IP	55											
pump weight	without motor	kg	1,9	1,9	1,9	1,9	1,9	1,9	1,9	1,9	2	1,9	2	2
	IEC-Motor 3-phase(*)	kg	5,6	6,2	7,3	6,2	7,3	8,2	7,3	8,2	9,8	8,2	9,8	11,4
	IEC-Motor 1-phase(*)	kg	5,6	6,3	7,3	6,3	7,3	8,2	7,3	8,2	11	8,2	11	12
	NEMA-Motor (*)	kg	-	-	-	-	-	-	-	-	-	-	-	-
Noise		dB	58			62			65			65		
loads (ports section)		kg	max. single strength value F(x;y;z) = 2											
Max. head		m	8,5			10,5			10,8			11,2		
Max. capacity		m³/h	6			8			11			13		
Max. NPSH required		m	3,2			3,3			3,2			5		

(*) can change for motor of different brand

AM		Model	05.05			05.11			07.09			07.11		
		Execution	N	P	S	N	P	S	N	P	S	N	P	S
Power		kW	0,25	0,37	0,55	0,37	0,55	0,75	0,55	0,75	1,1	0,75	1,1	-
		Hp	0,34	0,5	0,75	0,5	0,75	1	0,75	1	1,5	1	1,5	-
Frame		IEC	63B	71A	71B	71A	71B	80A	71B	80A	80B	80A	80B	-
		NEMA	A56	A56	B56	A56	B56	B56	B56	B56	D56	B56	D56	-
Voltage standard		V (IEC)	460 ± 5% 60 Hz											
		V (NEMA)	460 ± 5% 60 Hz											
Phase		N°	3 phase / 1 phase											
Protection level		IP	55											
pump weight	without motor	kg	1,9	1,9	1,9	1,9	1,9	2	1,9	2	2	2	2	-
	IEC-Motor 3-phase(*)	kg	6,2	7,3	8,2	7,3	8,2	9,8	8,2	9,7	11,4	9,8	11,4	-
	IEC-Motor 1-phase(*)	kg	6,3	7,3	8,2	7,3	8,2	11	8,2	11	12	11	12	-
	NEMA-Motor (*)	kg	11,5	12	12,5	12	12,5	13,5	12,5	13,5	15	13,5	15	-
Noise		dB	58			62			65			65		
loads (ports section)		kg	max. single strength value F(x;y;z) = 2											
Max. head		m	12			15			15,5			16		
Max. capacity		m³/h	6			9			12			14		
Max. NPSH required		m	4,4			4,5			4,4			6		

(*) can change for motor of different brand

13. Dimensions

13.1 AM - IEC -50/60Hz (mm)

	04.04			04.08			06.08			06.10			05.05			05.11			07.09			07.11		
	50 Hz												60 Hz											
DeM (BSP-NPT)	3/4" AG			1" AG			1 1/4" AG			1 1/4" AG			3/4" AG			1" AG			1 1/4" AG			1 1/4" AG		
DeA (BSP-NPT)	3/4" IG			1" AG			1 1/4" AG			1 1/4" AG			3/4" IG			1" AG			1 1/4" AG			1 1/4" AG		
DnM	20			25			32			32			20			25			32			32		
DnA	20			25			32			32			20			25			32			32		
KM (ISO - ANSI)	/			85 - 79			100 - 89			100 - 89			/			85 - 79			100 - 89			100 - 89		
KA (ISO - ANSI)	/			86 - 79			100 - 89			100 - 89			/			86 - 79			100 - 89			100 - 89		
d x z (ISO - ANSI)	/			14 x 4 - 16 x 4			14 x 4 - 16 x 4			14 x 4 - 16 x 4			/			14 x 4 - 16 x 4			14 x 4 - 16 x 4			14 x 4 - 16 x 4		
a1	62			62			62			62			62			62			62			62		
a1.1	/			70			70			70			/			70			70			70		
Q	47			49			53			53			47			49			53			53		
h2	100			100			100			100			100			100			100			100		
h2.1	/			108			108			108			/			108			108			108		
	N	P	S	N	P	S	N	P	S	N	P	S	N	P	S	N	P	S	N	P	S	N	P	S
L*	330	330	348	330	348	348	348	348	388	348	388	388	330	348	348	348	348	388	348	388	388	388	388	/
h1	63	63	71	63	71	71	71	71	80	71	80	80	63	71	71	71	71	80	71	80	80	80	80	/
HD*	160	160	177	160	177	177	177	177	190	177	190	190	160	177	177	177	177	190	177	190	190	190	190	/
m1	80	80	90	80	90	90	90	90	100	90	100	100	80	90	90	90	90	100	90	100	100	100	100	/
n1	100	100	112	100	112	112	112	112	125	112	125	125	100	112	112	112	112	125	112	125	125	125	125	/
r1	123	123	123	123	123	123	123	123	133	123	133	133	123	123	123	123	123	133	123	133	133	133	133	/
r	163	163	168	163	168	168	168	168	183	168	183	183	163	168	168	168	168	183	168	183	183	183	183	/
rb	135	135	135	135	135	135	135	135	145	135	145	145	135	135	135	135	135	145	135	145	145	145	145	/
s	7	7	7	7	7	7	7	7	10	7	10	10	7	7	7	7	7	10	7	10	10	10	10	/
B2	/	/	248	/	248	248	248	248	248	248	248	248	/	248	248	248	248	248	248	248	248	248	248	/
B3	/	/	308	/	308	308	308	308	308	308	308	308	/	308	308	308	308	308	308	308	308	308	308	/
L1	/	/	245	/	245	245	245	245	245	245	245	245	/	245	245	245	245	245	245	245	245	245	245	/
L3	/	/	185	/	185	185	185	185	185	185	185	185	/	185	185	185	185	185	185	185	185	185	185	/
h3	/	/	40	/	40	40	40	40	40	40	40	40	/	40	40	40	40	40	40	40	40	40	40	/
S2	/	/	14	/	14	14	14	14	14	14	14	14	/	14	14	14	14	14	14	14	14	14	14	/

* can change for motors of different brands

** hose connection only 04.04, 05.05

GB

AM - IEC -50/60Hz (mm)

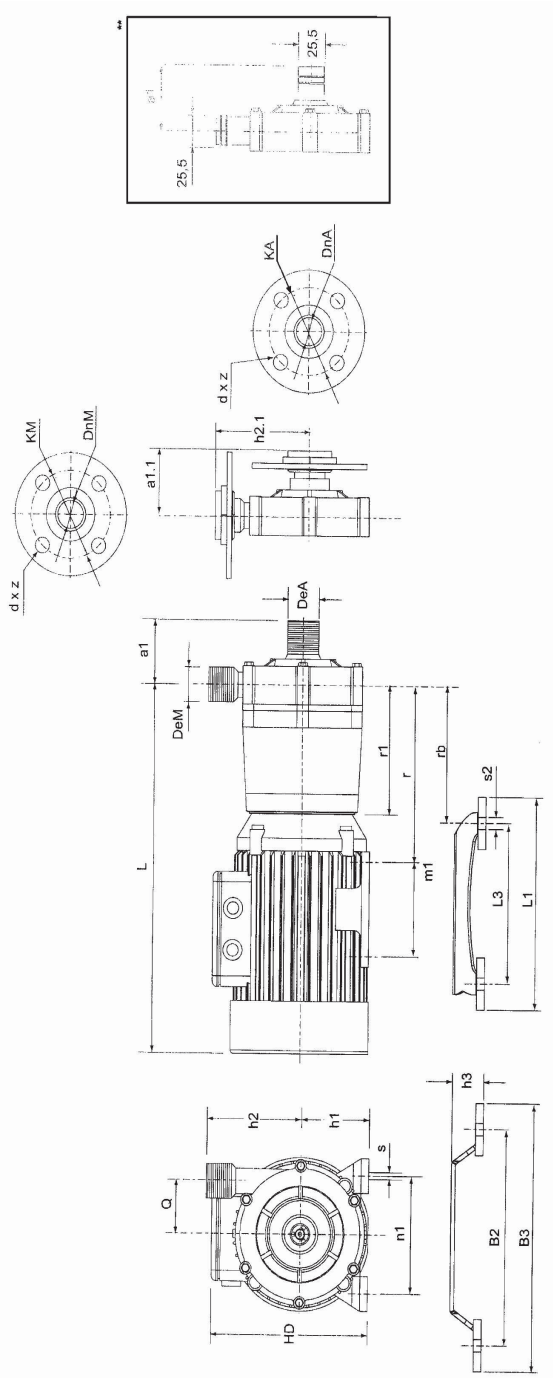

State of art 09/09

13. Dimensions

13.1 AM - NEMA - 60Hz (inch)

	05.05			05.11			07.09			07.11		
DeM (BSP-NPT)	3/4" AG			1" AG			1 1/4" AG			1 1/4" AG		
DeA (BSP-NPT)	3/4" IG			1" AG			1 1/4" AG			1 1/4" AG		
DnM	0,787			0,984			1,260			1,260		
DnA	0,787			0,984			1,260			1,260		
KM (ISO - ANSI)	/			3,346 - 3,110			3,937 - 3,503			3,937 - 3,503		
KA (ISO - ANSI)	/			3,346 - 3,110			3,937 - 3,503			3,937 - 3,503		
d x z (ISO - ANSI)	/			0.551 x 0.157 - 0.629 x 0.157			0.551 x 0.157 - 0.629 x 0.157			0.551 x 0.157 - 0.629 x 0.157		
a1	2,440			2,440			2,440			2,440		
a1.1	/			2,755			2,755			2,755		
Q	1,850			1,929			2,086			2,086		
h2	3,937			3,937			3,937			3,937		
h2.1	/			4,251			4,251			4,251		
	N	P	S	N	P	S	N	P	S	N	P	S
L*	13,938	13,938	14,725	13,938	14,725	14,725	14,725	14,725	15,906	14,725	15,906	/
h1	3,5	3,5	3,5	3,5	3,5	3,5	3,5	3,5	3,5	3,5	3,5	/
HD*	/	/	/	/	/	/	/	/	/	/	/	/
m1	3	3	3	3	3	3	3	3	3	3	3	/
n1	4,875	4,875	4,875	4,875	4,875	4,875	4,875	4,875	4,875	4,875	4,875	/
r1	5,685	5,685	5,685	5,685	5,685	5,685	5,685	5,685	5,685	5,685	5,685	/
r	8,246	8,246	8,246	8,246	8,246	8,246	8,246	8,246	8,246	8,246	8,246	/
rb	6,18	6,18	6,18	6,18	6,18	6,18	6,18	6,18	6,18	6,18	6,18	/
s	0,342	0,342	0,342	0,342	0,342	0,342	0,342	0,342	0,342	0,342	0,342	/
B2	/	9,763	9,763	9,763	9,763	9,763	9,763	9,763	9,763	9,763	9,763	/
B3	/	12,125	12,125	12,125	12,125	12,125	12,125	12,125	12,125	12,125	12,125	/
L1	/	9,645	9,645	9,645	9,645	9,645	9,645	9,645	9,645	9,645	9,645	/
L3	/	7,283	7,283	7,283	7,283	7,283	7,283	7,283	7,283	7,283	7,283	/
h3	/	1,574	1,574	1,574	1,574	1,574	1,574	1,574	1,574	1,574	1,574	/
S2	/	0,551	0,551	0,551	0,551	0,551	0,551	0,551	0,551	0,551	0,551	/

* can change for motors of different brands
** hose connection only 05.05

AM - NEMA - 60Hz (inch)

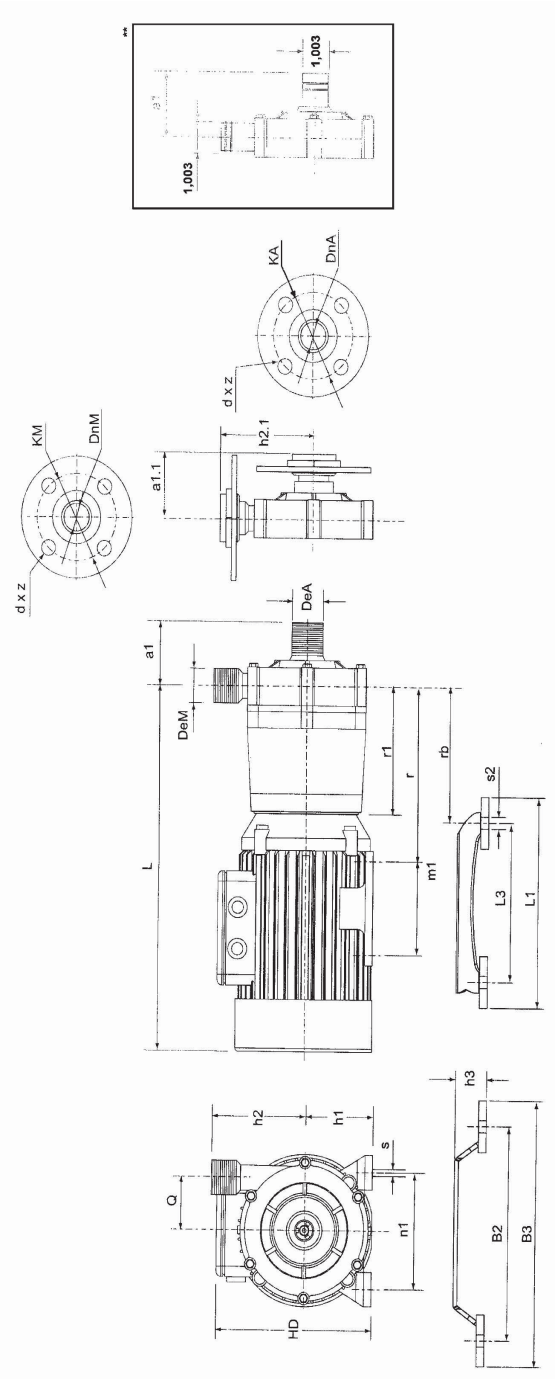

State of art 09/09

Lutz Pumpen GmbH
Erlenstraße 5-7
D-97877 Wertheim

Declaration of Conformity

We herewith declare that the design and construction of the following machine in the versions marketed by us fully comply with the relevant basic safety and health requirements specified by the EC Directives listed.

This declaration ceases to be valid if the machine is modified in any way without prior consultation with us.

Type of device: Horizontal centrifugal pump with magnetic coupling

Type: **AM**

EC Directives:

Execution:	WR	GF	GX
EC-Directive 2006/42/EC, annex I, section 1 without 1.2; such machines do not include commands or start/stop controls	●	●	●
EC-Directive on low voltage installations 2006/95/EC	●	●	●
EMV-Directive (2004/108/EC)	●	●	●
Atex-Directive 94/9/EC			●

Registered number: LCIE 0081, 33 av du Gènèral Leclerc, 92266 Fontenay-aux-Roses cedex (France)
Entry No.: ATEX/ITA/05/030
Document-No.: N01 rev. 1
Identification: Ex II 2G T4

Applicable harmonized standards, in particular

ISO 2858	ISO 3746	EN 953	EN 22858
ISO 2954	ISO 9905	EN 1050	EN 23661
ISO 3661	EN 809	EN 12162	EN 13463-1

Person authorised to compile the technical file:
Mr. Klaus Saemann, Lutz Pumpen GmbH, Erlenstraße 5-7, D-97877 Wertheim

Wertheim, 29.12.2009

Jürgen Lutz, Managing Director