Chlorine scrubber

Operating instructions

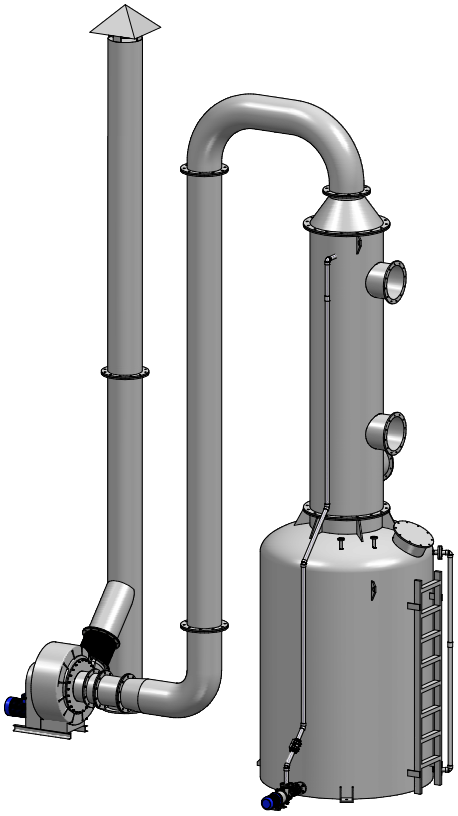

Read the operating manual!

The user is responsible for installation and operation related mistakes!

Translation of the original instructions

© Lutz-Jesco GmbH 2023

BA-27300-01-V08

Dosing Conveying Control | Liquids Gases Systems

Table of contents

1 Notes for the reader 4
1.1 General non-discrimination 4
1.2 Explanation of the signal words 4
1.3 Explanation of the warning signs 4
1.4 Identification of warnings 4
1.5 Instruction for action identification 4

2 Safety 5
2.1 General warnings 5
2.2 Information about chlorine 5
2.3 Hazards due to non-compliance with the safety instructions 5
2.4 Working in a safety-conscious manner 5
2.5 Personal protective equipment 6
2.6 Personnel qualification 6
2.7 Personnel tasks 6

3 Intended use 7
3.1 Notes on product warranty 7
3.2 Intended purpose 7

4 Product description 8
4.1 Scope of delivery 8
4.2 Design and function 8

5 Technical data 9
5.1 Single-stage chlorine scrubber 9
5.2 Two-stage chlorine scrubber 10
5.3 Temperature-stability caustic soda 11

6 Dimensions 12
6.1 Single-stage chlorine scrubber 12
6.2 Two-stage chlorine scrubber 13

7 Installation 14
7.1 Installation location 14
7.2 Hydraulic installations 14
7.3 Electrical installation 14
7.4 Completing the installation 14

8 Start-up 15
8.1 Control cabinet 15
8.2 Check that the system is leaktight 15
8.3 Commissioning the device 16

9 Operation 17
9.1 Test intervals 17
9.2 Simulating the release of chlorine gas 17

10 Shutdown and disposal 18
10.1 Shutdown 18
10.2 Disposal 18

11 Maintenance 19
11.1 Changing the NaOH solution 19
11.2 Removing deposits 19
11.3 Cleaning the spray nozzle 19
11.4 Finishing maintenance 19

12 Troubleshooting 20

13 System drawings 21

14 Switching diagrams 26
14.1 Single-stage chlorine scrubber 26
14.2 Two-stage chlorine scrubber 28

15 Decontamination declaration 30

16 Warranty claim 31

17 Index 32

© Lutz-Jesco GmbH 2023
Subject to technical changes.
231205

1 Notes for the reader

This operating manual contains information and behaviour rules for the safe and designated operation of the device.

Observe the following principles:

- Read the entire operating manual prior to starting-up the device.
- Ensure that everyone who works with or on the device has read the operating manual and follows it.
- Maintain the operating manual throughout the service life of the device.
- Pass the operating manual on to any subsequent owner of the device.

1.1 General non-discrimination

In this operating manual, only the male gender is used where grammar allows gender allocation. The purpose of this is to make the text easy to read. Men and women are always referred to equally. We would like to ask female readers for understanding of this text simplification.

1.2 Explanation of the signal words

Different signal words in combination with warning signs are used in this operating manual. Signal words illustrate the gravity of possible injuries if the risk is ignored:

Signal word	Meaning
DANGER	Refers to imminent danger. Ignoring this sign may lead to death or the most serious injuries.
WARNING	Refers to a potentially hazardous situation. Failure to follow this instruction may lead to death or severe injuries.
CAUTION	Refers to a potentially hazardous situation. Failure to follow this instruction may lead to minor injury or damage to property.
NOTE	Refers to a danger which, if ignored, may lead to risk to the machine and its function.

Table 1: Explanation of the signal words

1.3 Explanation of the warning signs

Warning signs represent the type and source of a danger:

Warning sign	Type of danger
	General danger zone
	Danger from poisonous substances
	Danger from electrical voltage
	Danger of damage to machine or functional influences

Table 2: Explanation of the warning signs

1.4 Identification of warnings

Warnings are intended to help you recognise risks and avoid negative consequences.

This is how warnings are identified:

Warning sign	**SIGNAL WORD**
Description of danger. Consequences if ignored. ⇨ The arrow signals a safety precaution to be taken to eliminate the danger.	

1.5 Instruction for action identification

This is how pre-conditions for action are identified:

✓ Pre-condition for action which must be met before taking action.

🛠 A resource such as a tool or auxiliary materials required to perform the operating instructions.

This is how instructions for action are identified:

➔ Separate step with no follow-up action.

1. First step in a series of steps.

2. Second step in a series of steps.

▸ Result of the above action.

✓ **Action completed, aim achieved.**

© Lutz-Jesco GmbH 2023

2 Safety

2.1 General warnings

The following warnings are intended to help you eliminate the dangers that can arise while handling the device. Risk prevention measures always apply regardless of any specific action.

Safety instructions warning against risks arising from specific activities or situations can be found in the respective sub-chapters.

DANGER

Danger to life from chlorine poisoning!

Chlorine is poisonous. In severe cases, breathing in chlorine may lead to death. It irritates the eyes, the respiratory system and the skin.

- ⇨ Use sufficient personal protective equipment.
- ⇨ When carrying out any work on the system, use a respirator mask with a Type B gas filter that complies with EN 14387.
- ⇨ Always comply with the accident prevention regulations that apply at the place of use.
- ⇨ Get rid of leaks without delay. You must get rid of even very minor leaks without delay.
- ⇨ Use only chlorine-resistant seals.
- ⇨ Only use seals once. Reusing them leads to leaks.

DANGER

Danger to life from chlorine poisoning!

Chlorinators without gas warning devices are an increased safety risk, since it is not possible to detect escaping chlorine gas in good time or at all.

- ⇨ Install a gas warning device.

WARNING

Increased risk of accidents due to insufficient qualification of personnel!

Chlorinators and their accessories must only be installed, operated and maintained by personnel with sufficient qualifications. Insufficient qualification will increase the risk of accidents.

- ⇨ Ensure that all action is taken only by personnel with sufficient and corresponding qualifications.
- ⇨ Prevent access to the system for unauthorised persons.

NOTE

Malfunctions from a blocked circulation pump or spray nozzles

The neutralisation agent caustic soda (20% NaOH) is chemically stable at normal temperature conditions. If the minimum operating temperature (see section 5.3 „Temperature-stability caustic soda“ on page 11) is undercut, this will result in the development of crystals in the solution which can result in the blockage of the circulation pump and the spray nozzles.

- ⇨ If it is possible that the minimum operating temperature could be undercut, install a heater.
- ⇨ Do not alter the concentration of the caustic soda The minimum operating temperature depends on the concentration.

2.2 Information about chlorine

Chlorine is a hazardous substance. The chemical element chlorine is a greenish-yellow, toxic gas with a pungent odour, which can be detected in the air at concentrations below 1 ppm (= 1 ml/m³).

Chlorine is 2.5 times heavier than air and accumulates at ground level.

Chlorine is extremely toxic for water organisms. The reason for the toxicity of chlorine is its extraordinary reactivity. It reacts with animal and vegetable tissue and thus destroys it.

Air with a chlorine gas content of 0.5 -1% leads to a quick death in mammals and humans, as it attacks the respiratory tract and the pulmonary alveolus (formation of hydrogen chloride or hydrochloride acid).

2.3 Hazards due to non-compliance with the safety instructions

Failure to follow the safety instructions may endanger not only persons, but also the environment and the device.

The specific consequences can be:

- Failure of important functions of the device and of the corresponding system
- Failure of required maintenance and repair methods,
- Danger to persons
- Danger to the environment caused by substances leaking from the system

2.4 Working in a safety-conscious manner

Besides the safety instructions specified in this operating manual, further safety rules apply and must be followed:

- Accident prevention regulations
- Safety and operating provisions
- Safety regulations on handling hazardous substances
- Environmental protection provisions
- Applicable standards and legislation

© Lutz-Jesco GmbH 2023
Subject to technical changes.
231205

2.5 Personal protective equipment

Based on the degree of risk posed by the dosing medium and the type of work you are carrying out, you must use corresponding protective equipment. Read the Accident Prevention Regulations and the Safety Data Sheets to the dosing media find out what protective equipment you need.

You will require the minimum of the following personal protective equipment:

Personal protective equipment required	
	Respirator mask
	Protective clothing
	Safety shoes
	Protective gloves

Table 3: Personal protective equipment required

Wear the following personal protective equipment when performing the following tasks:

- Commissioning
- All work on gas-bearing sections of the plant
- Changing the chlorine tank
- Shutdown
- Maintenance work
- Disposal

2.6 Personnel qualification

Any personnel who work on the device must have appropriate special knowledge and skills.

Anybody who works on the device must meet the conditions below:

- Attendance at all the training courses offered by the owner
- Personal suitability for the respective activity
- Sufficient qualification for the respective activity
- Training in how to handle the device
- Knowledge of safety equipment and the way this equipment functions,
- Knowledge of this operating manual, particularly of safety instructions and sections relevant for the activity
- Knowledge of fundamental regulations regarding health and safety and accident prevention

All persons must generally have the following minimum qualification:

- Training as specialists to carry out work on the device unsupervised
- Sufficient training that they can work on the device under the supervision and guidance of a trained specialist

These operating instructions differentiate between these user groups:

2.6.1 Specialist staff

Thanks to their professional training, knowledge, experience and knowledge of the relevant specifications, specialist staff are able to perform the job allocated to them and recognise and/or eliminate any possible dangers by themselves.

2.6.2 Trained electricians

Due to their professional training, knowledge and experience as well as knowledge of specific standards and provisions, trained electricians are able to do the electrical work assigned to them and to recognise and avoid any potential dangers by themselves.

They are specially trained for their specific working environment and are familiar with relevant standards and provisions.

They must comply with the legally binding regulations on accident prevention.

2.6.3 Trained persons

Trained persons have received training from the operator about the tasks they are to perform and about the dangers stemming from improper behaviour.

Trained persons have attended all trainings offered by the operator.

2.7 Personnel tasks

In the table below you can check what qualifications are the pre-condition for the respective tasks. Only people with appropriate qualifications are allowed to perform these tasks!

Qualification	Activities
Specialist staff	■ Assembly ■ Hydraulic installations ■ Commissioning ■ Taking out of operation ■ Fault rectification ■ Maintenance ■ Repairs ■ Disposal
Trained electricians	■ Electrical installation ■ Rectifying electrical faults ■ Electrical repairs
Trained persons	■ Control ■ Transportation ■ Storage

Table 4: Personnel qualification

© Lutz-Jesco GmbH 2023

3 Intended use

3.1 Notes on product warranty

Any non-designated use of the device can impair its function and the protection provided. This leads to invalidation of any warranty claims!

Please note that liability is on the side of the user in the following cases:

- The device is operated in a manner which is not consistent with these operating instructions, particularly safety instructions, handling instructions and the section "Intended Use".
- Information on usage and environment (see section 5 „Technical data“ on page 9) is not adhered to.
- if people operate the device who are not adequately qualified to carry out their respective activities.
- No original spare parts or accessories of Lutz-Jesco GmbH are used.
- Unauthorised changes are made to the device.
- The user uses different dosing media than those indicated in the order.
- Maintenance and inspection intervals are not adhered to as required or not adhered to at all.
- The device is commissioned before it or the corresponding system has been correctly and completely installed.
- Safety equipment has been bridged, removed or made inoperative in any other way.

3.2 Intended purpose

The chlorine scrubber is intended for the following purpose only: Extract ambient air in a room contaminated with chlorine gas in an absorption tower with an integrated caustic soda sprayer to clean the extracted air from chlorine gas and return it to the environment in an non-dangerous state.

© Lutz-Jesco GmbH 2023
Subject to technical changes.

4 Product description

4.1 Scope of delivery

Please compare the delivery note with the scope of delivery. The following items are part of the scope of delivery.

Version single-stage chlorine scrubber

- Circulation pump and suction ventilator
- Optional: 1 additional circulation pump
- Optional: 1 circulation pump and 1 suction ventilator additionally
- Priming aid for neutralisation agent
- Neutralisation tower with spray nozzle
- Piping for the circulation pump and suction ventilator
- Control cabinet
- Operating manuals

Version two-stage chlorine scrubber

- Circulation pump and suction ventilator additionally
- Optional: 1 circulation pump and 1 suction ventilator additionally
- Priming aid for neutralisation agent
- 2 neutralisation towers with spray nozzle
- Piping for the circulation pump and suction ventilator
- Operating manuals

4.2 Design and function

4.2.1 Design

The basic structure of a chlorine scrubber comprises a container (pos. 3) for the washing fluid (20% NaOH), an absorption column filled with packing material (pos. 6), spray nozzles (pos. 5) for the distribution of the washing fluid in the column, a circulation pump (pos. 7) for the transport of the washing fluid to the spray nozzles, a ventilator (pos. 2) for the priming of the air contaminated with chlorine gas (raw gas) and a demister (pos. 4) for the removal of drops of washing fluid from the cleaned air (pure gas). A control cabinet (pos. 1) controls the operation of the chlorine scrubber.

Optional versions such as e.g. a second absorption column for the reducing the total construction height or two circulation pumps or ventilators to ensure system operation with the maintenance of the previously named components does not change the basic structure of the chlorine scrubber described above.

4.2.2 Function

The air contaminated with chlorine (raw gas) is transported by the suction ventilator in the neutralisation tower, from where it flows upwards in the direction of the spray nozzles. In the area of the packing material, there is intensive contact between the raw gas flowing upwards and the neutralisation agent. The chemical neutralisation reaction is:

$2\ NaOH + Cl_2 = NaOCl + NaCl + H_2O$

Caustic soda + Chlorine = Sodium hypochlorite + Sodium chloride + Water

Before leaving the chlorine scrubber, the cleaned air (pure gas) passes through a demister in which the droplets of fluid are removed.

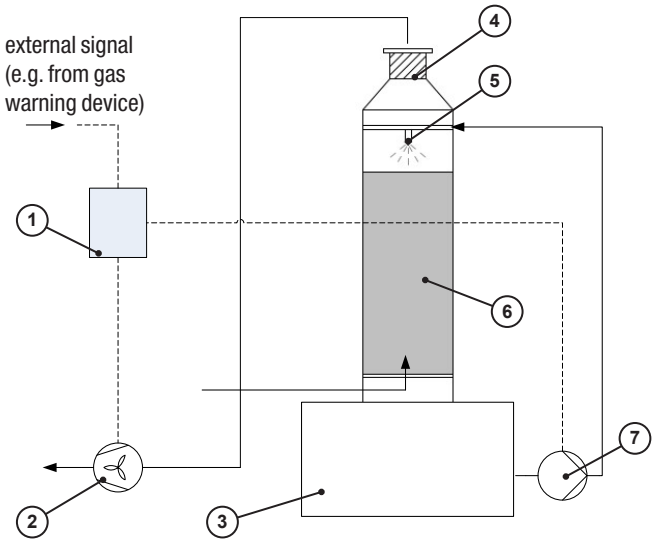

Fig. 1: Structure of the chlorine scrubber

Position	Description
1	Control cabinet
2	Fan
3	Container for washing fluid (20% NaOH)
4	Demister
5	Spray nozzles
6	Packed column
7	Circulation pump

Table 5: Description of components

© Lutz-Jesco GmbH 2023

5 Technical data

5.1 Single-stage chlorine scrubber

Description		Value
General data		
Scrubber version		Counterflow packed column
Volume of raw gas		max. 1000 kg/h
Neutralisation agent		20% caustic soda
Neutralising performance		> 99 %
Container for caustic soda		
Dimensions (Ø x H)		2000 x 2700 mm
Volume		c. 8 m³
Material		FRP
Packed column		
Quantity		1
Dimensions (Ø x H)		1000 x 3760 mm
Loading height with packing material		2000 mm
Material	Column	FRP
	Packing material	PP
	Spray nozzle	PVC
	Demister	PVC
Circulation pump		
Version		Horizontal centrifugal pump
Capacity		10 m³/h @ 10 m
Power		415 V / 3 Ph / 50 Hz / 0,37 kW
Speed of the motor		2900 U/min
Fan		
Version		Radial ventilator
Capacity		5100 m³/h @ 0,15 bar
Speed of the ventilator		3000 U/min
Power		415 V / 3 Ph / 50 Hz / 5,5 kW
Connections		
Tank	Input water	25 mm flange
	Caustic soda input	25 mm flange
	Pump suction side	40 mm flange
	Outflow / overflow	50 mm flange
Packed column	Raw gas input	400 mm flange
	Pure gas output	400 mm flange
Ambient temperature		0 – 55°C (no exposure to direct sunlight)

Table 6: Technical data - single-stage chlorine scrubber

© Lutz-Jesco GmbH 2023
Subject to technical changes.
231205

5.2 Two-stage chlorine scrubber

Description		Value
General data		
Scrubber version		Counterflow packed column
Volume of raw gas		max. 1000 kg/h
Neutralisation agent		20% caustic soda
Neutralising performance		> 99 %
Container for caustic soda		
Dimensions (W x L x H)		1800 x 4000 x 1500 mm
Volume		c. 8 m³
Material		FRP
Packed column		
Quantity		2
Dimensions (Ø x H)		950 x 3000 mm
Loading height with packing material		1200 mm
Material	Column	FRP
	Packing material	PP
	Spray nozzles	PVC
	Demister	PVC
Circulation pump		
Version		Horizontal centrifugal pump
Capacity		10 m³/h @ 10 m
Power		415 V / 3 Ph / 50 Hz / 1,5 kW
Speed of the motor		2900 U/min
Fan		
Version		Radial ventilator
Capacity		5100 m³/h @ 0,15 bar
Speed of the ventilator		3000 U/min
Power		415 V / 3 Ph / 50 Hz / 5,5 kW
Connections		
Tank	Input water	1 ½" flange
	Caustic soda input	50 mm flange
	Pump suction side	40 mm flange
	Outflow / overflow	2" flange
Packed column	Raw gas input	400 mm flange
	Pure gas output	400 mm flange
Ambient temperature		0 – 55°C (no exposure to direct sunlight)

Table 7: Technical data - two-stage chlorine scrubber

© Lutz-Jesco GmbH 2023

5.3 Temperature-stability caustic soda

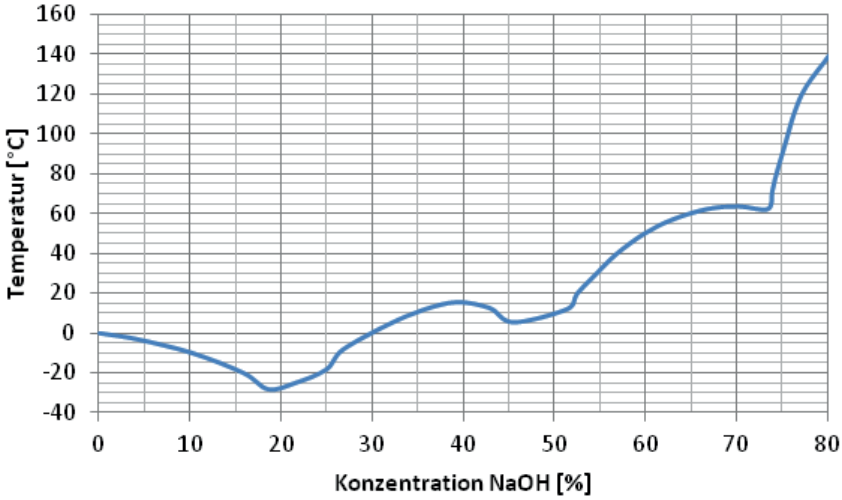

Fig. 2: Temperature-stability caustic soda

The curve shows the start of crystal development in the NaOH solution in dependence on the concentration of the caustic soda. As you can see, crystals first begin to develop in the 20% caustic soda below -20°C.

© Lutz-Jesco GmbH 2023
Subject to technical changes.
231205

6 Dimensions

All dimensions in millimetres (mm).

6.1 Single-stage chlorine scrubber

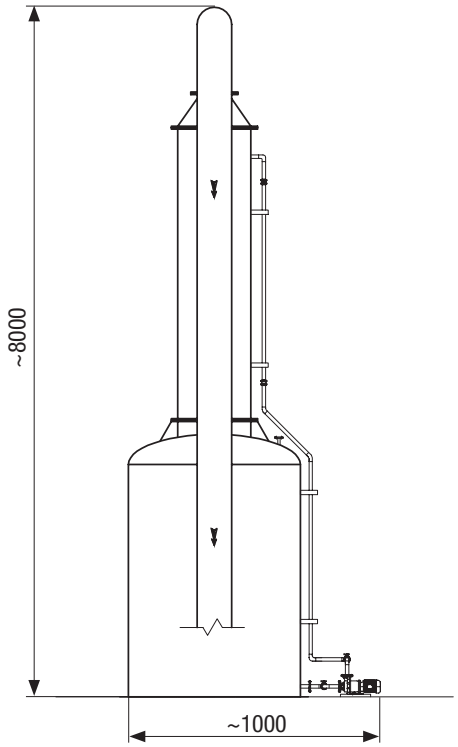

Fig. 3: Lateral view of the single-stage chlorine scrubber

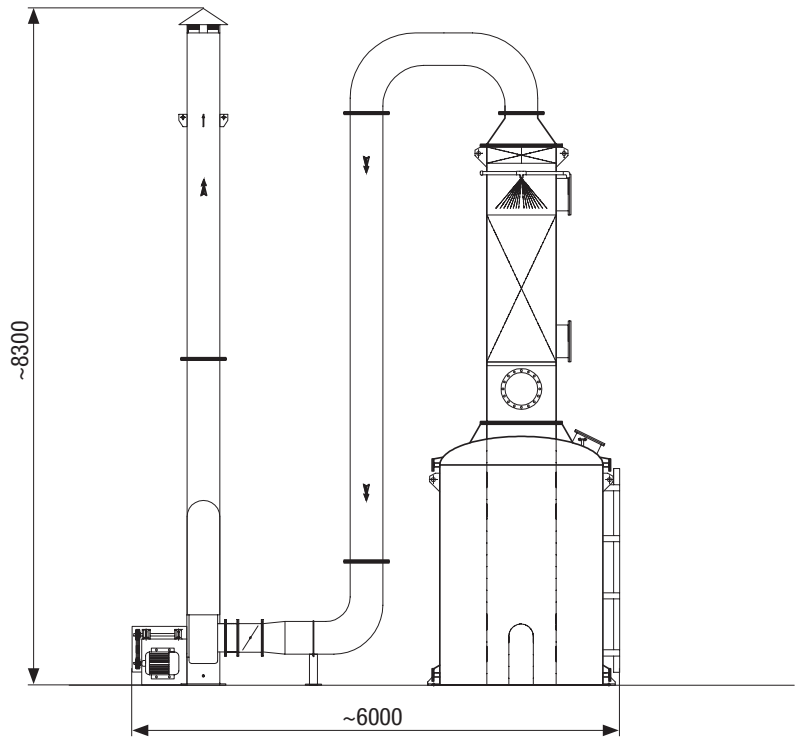

Fig. 4: Fore view of the single-stage chlorine scrubber

© Lutz-Jesco GmbH 2023

6.2 Two-stage chlorine scrubber

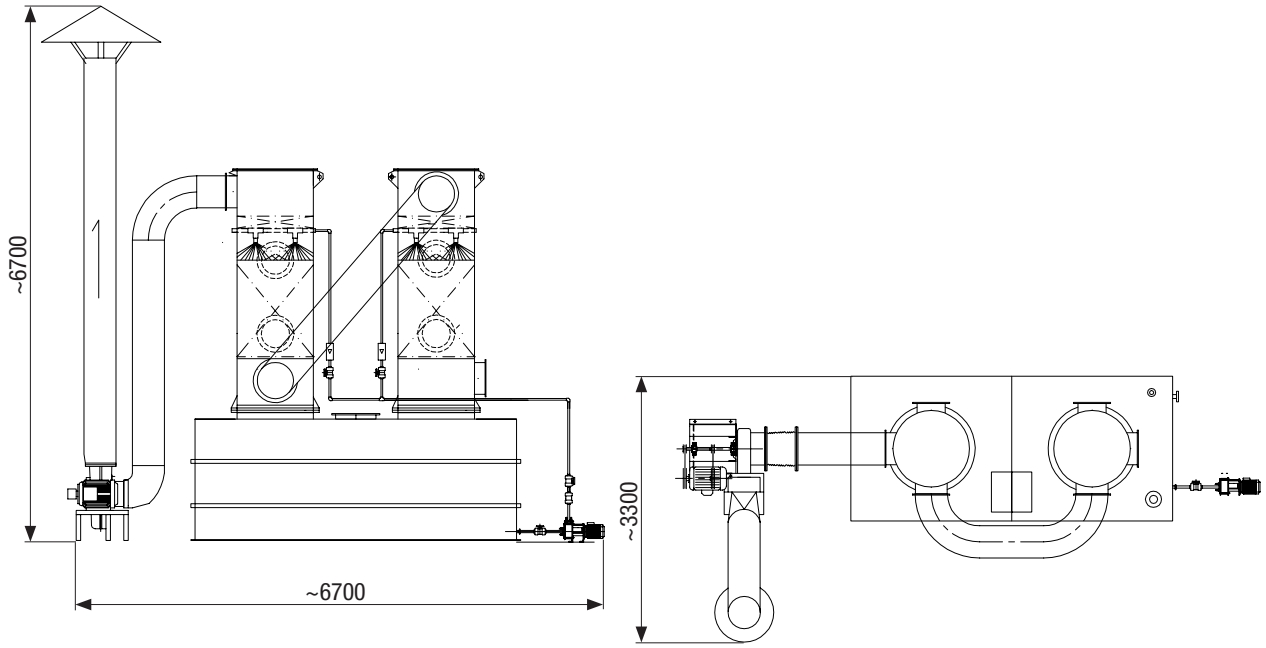

Fig. 5: Fore view and plan view of the two-stage chlorine scrubber

7 Installation

WARNING

Danger of personal injury and material damage!

The system and its components are especially large and heavy. Comply with all safety measures during transportation and installation of the system in order to prevent injury and damage to property.

⇨ Transport the system parts with suitable lifting gear.

⇨ Wear safety clothing whilst transporting the device.

⇨ Never transport the system or its components alone. It must be carried by min. two persons.

7.1 Installation location

- The installation location must comply with the locally valid prescriptions
- Ensure sufficient venting of the electric drive of the ventilator and the pump at all times.
- The system must be accessible for operation, inspection and filling of the NaOH container at all times.
- Select a level base for installation. The base must be able to support the entire operating weight of the chlorine scrubber, the circulation pump and the ventilator and be able to absorb all types of vibration.

7.2 Hydraulic installations

The chlorine scrubber has been dismantled into its main parts for transport. Install the components at the installation location as shown in section 13 „System drawings“ on page 21.

As the only real difference between the one and two-stage scrubber is the second packed column, the description of the work steps for the installation of the scrubber does not differentiate between the two versions.

Pre-conditions for actions:

✓ The device is located close to the concrete bas intended for installation.

Perform the following working steps:

1. Use suitable lifting gear to lift the NaOH container (1) onto the base using the two lifting lugs (2).
2. Secure it to the base using the three fastening clips (3). To this end, use suitable fixing devices (e.g. a bolt anchor) of sufficient length, to enable later levelling of the container (e.g. using washers).
3. Use suitable lifting gear to lift the packed column (4) at the lifting lugs (5) an. Place the packed column on the NaOH container and secure it.
4. Fit the circulation pump (6) on the base next to the container.
5. Install a pipe connection between the pump container connection flange (7) and the suction connection of the circulation pump. Install a ball valve in the pipe line (8). When using two circulation pumps, connect both pumps to the NaOH container via the pipe line and a T-piece. Instead of installing a ball valve in the pipe line to the NaOH container, install a ball valve in each pipe line to the T-piece.
6. Install a pipe connection (9) between the circulation pump and the spray nozzle (10) in the packed column. Install a ball valve in the pipe line (8).
7. Install a fill level display on the flanges (11 and 12) of the container.
8. Connect a fresh water inflow to the flange (13).
9. Install an overflow line on the flange (14) and an outflow line with stop valve on the flange (15).

Comply with the manufacturer’s instructions when installing and connecting the circulation pump and ventilator.

✓ **The system has been hydraulically installed.**

7.3 Electrical installation

Consult the respective operating manuals and the circuit diagram of the control cabinet for the exact procedure for the installation of the control cabinet and the connection of the pump and the ventilator to the control cabinet.

DANGER

Mortal danger from electric shock!

Live parts can inflict fatal injuries.

⇨ Disconnect all electrical devices from the power supply before undertaking any work on the system.

⇨ Secure all electrical devices against being switched on by accident.

7.4 Completing the installation

Check all electrical connections after completing the installation. Check all hydraulic connections for leak-tightness.

© Lutz-Jesco GmbH 2023

8 Start-up

DANGER

Chlorine gas can escape due to systems that are leaky or not installed correctly!

Chlorinators constitute an increased safety risk if they have not been properly installed, if an adequate leak test has not been performed or if the devices are not in good condition.

- ⇨ Before placing the system into operation, have it checked by technical personnel to ensure that it is in the proper condition and leaktight.
- ⇨ The condition of the installation must be checked for adequate tightness on a regular basis.
- ⇨ Get rid of leaks without delay. You must get rid of even very minor leaks without delay. Together with the humidity, chlorine forms hydrochloric acid and corrosion results in rapidly increasing leakage.

8.1 Control cabinet

Fig. 6 "Control cabinet" Shows the fore-view of the control cabinet for a scrubber with a circulation pump and a ventilator. The applicable wiring diagrams are shown in section 14 „Switching diagrams“ on page 26.

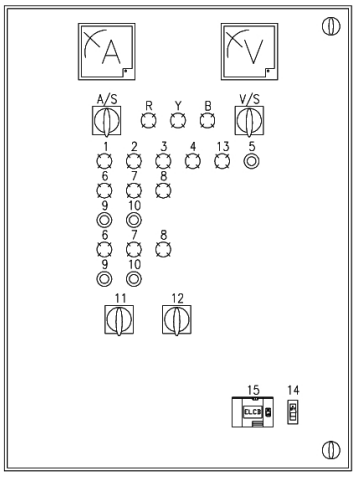

Fig. 6: Control cabinet

Position	Description
1	Display “System activated”
2	Display “Malfunction”
3	Display “Chlorine excess”
4	Display “Alarm”

Table 8: Control cabinet

Position	Description
5	“Clear alarm” button
6	Display “Pump / ventilator in operation”
7	Display “Pump / ventilator not in operation”
8	Display “Pump / ventilator overload”
9	“Manual stop pump / ventilator” button
10	“Manual stop pump / ventilator” button
11	Operating mode selector “Pump (A/0/M)“
12	Operating mode selector “Ventilator (A/0/M)“
13	Display “Leakage”
14	Power switch
15	FI circuit breaker

Table 8: Control cabinet

8.2 Check that the system is leaktight

Precondition for action:

- ✓ All of the scrubber components have been installed correctly.
- ✓ All electrical connections have been established and checked.
- ✓ The correct rotation direction of the circulation pump and the suction ventilator was checked.
- ✓ The circulation pump and the suction ventilator have been anchored to the floor in a level fashion.
- ✓ The operating mode selector of the pump (11) and the ventilator (12) are in the *0* position on the control cabinet.
- ✓ The mains switch (14) and the FI circuit breaker (15) are in the *off* / *0* position on the control cabinet.

Perform the following working steps:

1. Fill the priming aid with clean water until the impeller of the circulation pump has been flooded.
2. Check the container, the piping, valves and connections up to the pump for leaks. No water should be permitted to escape.
3. Open the shutoff valve on the discharge side of the circulation pump.
4. Place the mains switch and the FI circuit breaker in the *on* or *1* position.
5. Set the operating mode selector for the circulation pump and the ventilator on the control cabinet to manual operation (*M*).
6. Start the pump and the ventilator via the two green buttons (9) lead the water in circulation for min. 1 hour and check the system for leaks and the operation of the pump and the ventilator.

Should you find leaks:

7. Stop pump and ventilator operation with the two red buttons (10).

© Lutz-Jesco GmbH 2023
Subject to technical changes.
231205

8. Return the operating mode selector for the circulation pump and ventilator to the *0* position.
9. Close the shutoff valve of the container in the direction of the pump.
10. Repair the leak. Allow any adhesive surfaces to harden sufficiently and repeat the leak test.

If no leaks are found:

11. Stop pump operation via the red button (10) on the control cabinet.
12. Close the shutoff valve of the container in the direction of the pump.
13. Open the floor drain in the container and empty the container.
14. Stop the ventilator operation via the red button (10) on the control cabinet.

✓ **The system has been checked for leaks.**

8.3 Commissioning the device

WARNING

Damage of the circulation pump

The circulation pump may not be permitted to run dry.

⇨ Make sure that the impeller floods the pump before the pump is switched on.

Precondition for action:

✓ After it was installed, the system operated on a trial basis using water and air to ensure that it was able to prime ambient air and neutralisation liquid.

Perform the following working steps:

1. Fill the priming aid with neutralisation agent to the marking on the inspection glass.
2. Open the shutoff valve on the container so that the impeller floods the pump with neutralisation agent.
3. Set the operating mode selector of the pump and ventilator to automatic operation (*A*).

✓ **The device is commissioned.**

© Lutz-Jesco GmbH 2023

9 Operation

Individual operation is no longer necessary after the system has been put into automatic operation in the control cabinet. The system is monitored fully by the control program.

9.1 Test intervals

We recommend regular inspections and function tests to ensure problem-free system operation.

Interval	Test
Daily	■ Visual inspection of the system
Monthly	■ Inspection of the washing fluid (min. 19% NaOH, pH value: 13 - 14) by a chemical laboratory ■ Check whether the system starts automatically in an alarm situation (simulation of chlorine release)
Every 3 months	■ Inspect the washing fluid container and spray nozzles for deposits and encrustation.
Annually	■ Inspection of the electrical equipment by an electrician, especially the function of the safety equipment ■ Replace the NaOH solution

Table 9: Maintenance information and maintenance intervals

The inspection intervals and inspections to be performed on the pumps and the ventilators are listed in the operating manual of the respective devices.

9.2 Simulating the release of chlorine gas

The automatic start of the chlorine scrubber in an alarm situation can be checked by releasing a small quantity of chlorine gas in the vicinity of a chlorine sensor on the gas warning device. Chlorine gas generators (e.g. the chlorine test from Lutz-Jesco GmbH) provides a safe method to provide smaller quantities of chlorine gas. The quantity of chlorine generated by these devices (c. 5 ppm) can lie below the alarm threshold of the gas warning device so that under certain circumstances, it may be necessary to reduce the alarm threshold for the test.

© Lutz-Jesco GmbH 2023
Subject to technical changes.
231205

10 Shutdown and disposal

10.1 Shutdown

Perform the following working steps:

1. Stop automatic operation on the control cabinet.
2. Set the mains switch on the control cabinet to *off*.

✓ **Chlorine scrubber has been decommissioned.**

10.2 Disposal

➔ Clean the system before disposal. Unclean water may not be permitted to enter a domestic drain system.

➔ The system and all chemicals used must be disposed of in accordance with applicable local laws and regulations. They should not be disposed of as domestic waste!

© Lutz-Jesco GmbH 2023

11 Maintenance

System maintenance is not required as long as the chlorine scrubber is operated correctly and the inspection intervals are maintained.

We urgently recommend that you replace the NaOH solution and clean the NaOH container after every alarm operation of the chlorine scrubber with chlorine release and after one year at the latest (see 11.1 "Changing the NaOH solution").

Any deposits which have accreted on the floor of the NaOH container, the spray nozzle or the packing material must be removed (see 11.2 "Removing deposits" and 11.3 "Cleaning the spray nozzle").

11.1 Changing the NaOH solution

> The NaOH solution must be disposed of as dangerous waste in accordance with the local / regional / national / international specifications. The solution may not be permitted to enter a domestic drain system untreated.

Perform the following working steps:

1. Stop automatic system operation on the control cabinet.
2. Close the valve to the pump.
3. Open the drain valve on the container and dispose of the contents.
4. Close the drain valve.
5. Clean the tank interior (e.g. with a high-pressure cleaner) with hot water.
6. Open the drain valve on the container and dispose of the waste water.
7. Close the drain valve.
8. Fill the container with fresh NaOH solution.

✓ **NaOH solution changed**

11.2 Removing deposits

Pre-conditions for actions:

✓ Carry out steps 1 to 5 in section 11.1 "Changing the NaOH solution".

Perform the following working steps:

1. Fill the priming aid with a suitable detergent (e.g. 5% citric acid) until the impeller of the circulation pump has been flooded.
2. Open the valve to the pump.
3. Start the pump in manual operation and allow the detergent to circulate in the chlorine scrubber for a short time.
4. Stop pump operation.
5. Close the valve to the pump.
6. Open the drain valve and dispose of the detergent.
7. Close the drain valve.
8. Fill the container with fresh NaOH solution.

✓ **Deposits have been removed**

11.3 Cleaning the spray nozzle

Given strong deposits on the spray nozzle or the blockage of a spray nozzle remove and clean the spray nozzle from the spray head and.

Perform the following working steps:

1. Stop automatic system operation on the control cabinet.
2. Open the inspection hatch on the height of the spray head.
3. Dismantle the blocked spray nozzle from the spray head.
4. Clean the spray nozzle mechanically or with a suitable detergent (e.g. 5% citric acid).
5. Rinse the spray nozzle with warm water.
6. Return the spray nozzle onto the spray head and close the inspection port.

✓ **Spray nozzle cleaned**

11.4 Finishing maintenance

Perform the following working steps:

1. Make a note of the date and scope of the maintenance performed.
2. Attach a sticker displaying the maintenance date to the device.
3. To restart the system, proceed in accordance with the instructions in section 8 „Start-up“ on page 15.

✓ **Maintenance completed**

© Lutz-Jesco GmbH 2023
Subject to technical changes.
231205

12 Troubleshooting

All possible errors are listed in this table. Given malfunctions to the pump and ventilator, read the operating manuals of these components.

Problem	Possible cause	Remedy
No or only little NaOH solution is emitted from the spray nozzles.	No or too little NaOH solution in the container	Check whether there is sufficient NaOH solution in the container and refill if necessary
	Spray nozzle blocked	Clean the spray nozzles regularly (see section11.3 „Cleaning the spray nozzle“ on page 19)
	Air in the suction line or a leak in the line	Check the suction line from the container to the spray nozzle for leaks
	Pump impeller or suction line blocked	■ Clean the suction line ■ Clean the pump impeller (see pump operating manual)
	Incorrect rotation direction of the pump motor	Clean the electrical connection of the pump (see pump operating manual)
	The pump impeller has not been flooded completely.	Wait until the pump impeller has flooded completely.
The pump vibrates and is loud	Soiling in the pump interior generates unusual friction	Clean the pump (see operating manual of the pump)
	The pump and piping have not been fixed correctly	Check the fixing of the pump and piping.
The pump has too many leaks	The seals on the pipe line connections are defective	Check the function of the air hatch and the seal of the air channel
	The ring gaskets are defective	Check the function of the air hatch and the seal of the air channel
The ventilator carries too little or not at all	Defect of the air hatch or leaks in the air channel	Check the function of the air hatch and the seal of the air channel
	Impurities in the air channel	Investigate the air channel for impurities and remedy them
	Incorrect rotation direction of the ventilator	Check the electrical connection of the ventilator (see pump operating manual)

Table 10: Troubleshooting

 © Lutz-Jesco GmbH 2023

13 System drawings

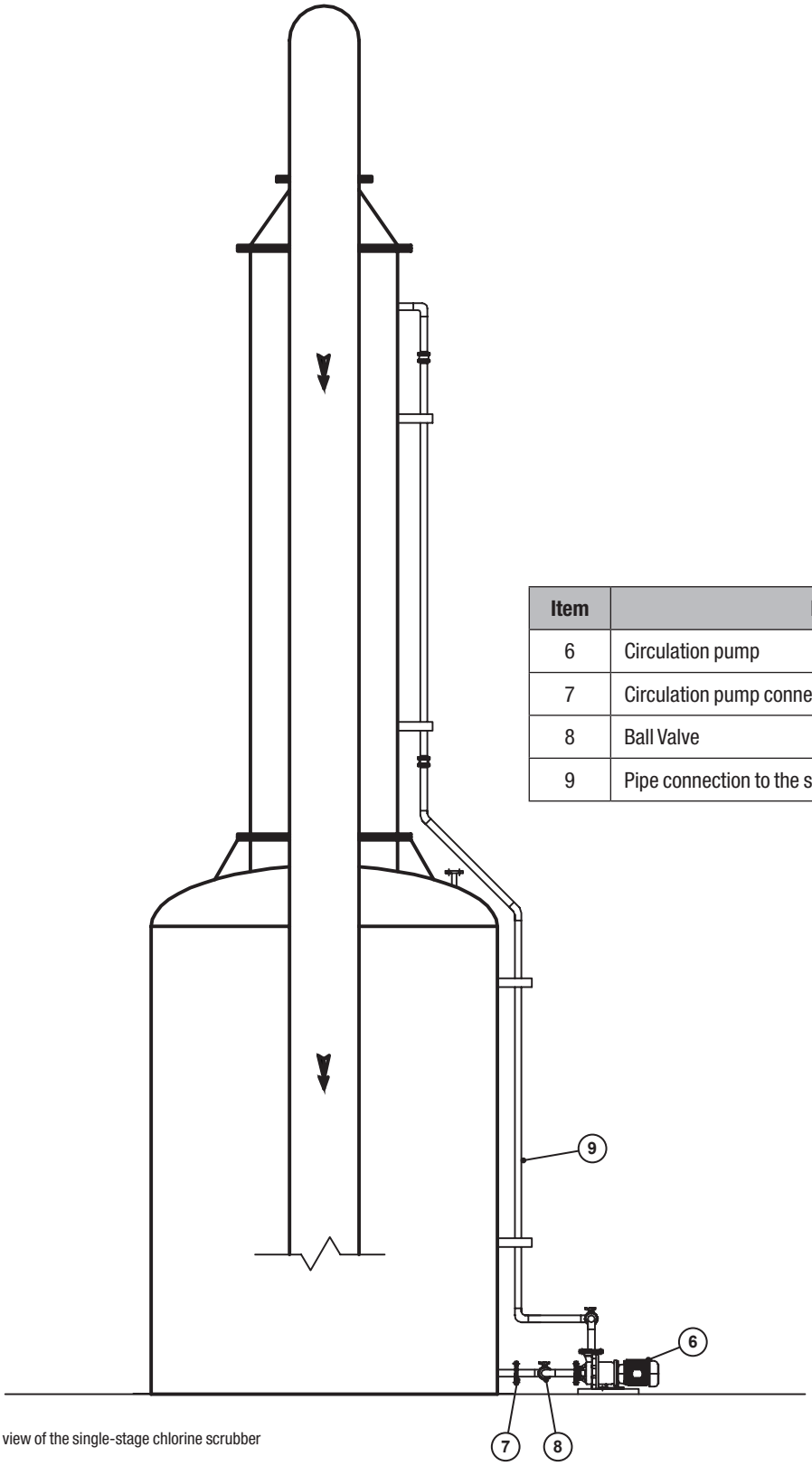

Item	Description
6	Circulation pump
7	Circulation pump connection flange
8	Ball Valve
9	Pipe connection to the spray nozzles

Fig. 7: Lateral view of the single-stage chlorine scrubber

© Lutz-Jesco GmbH 2023
Subject to technical changes.
231205

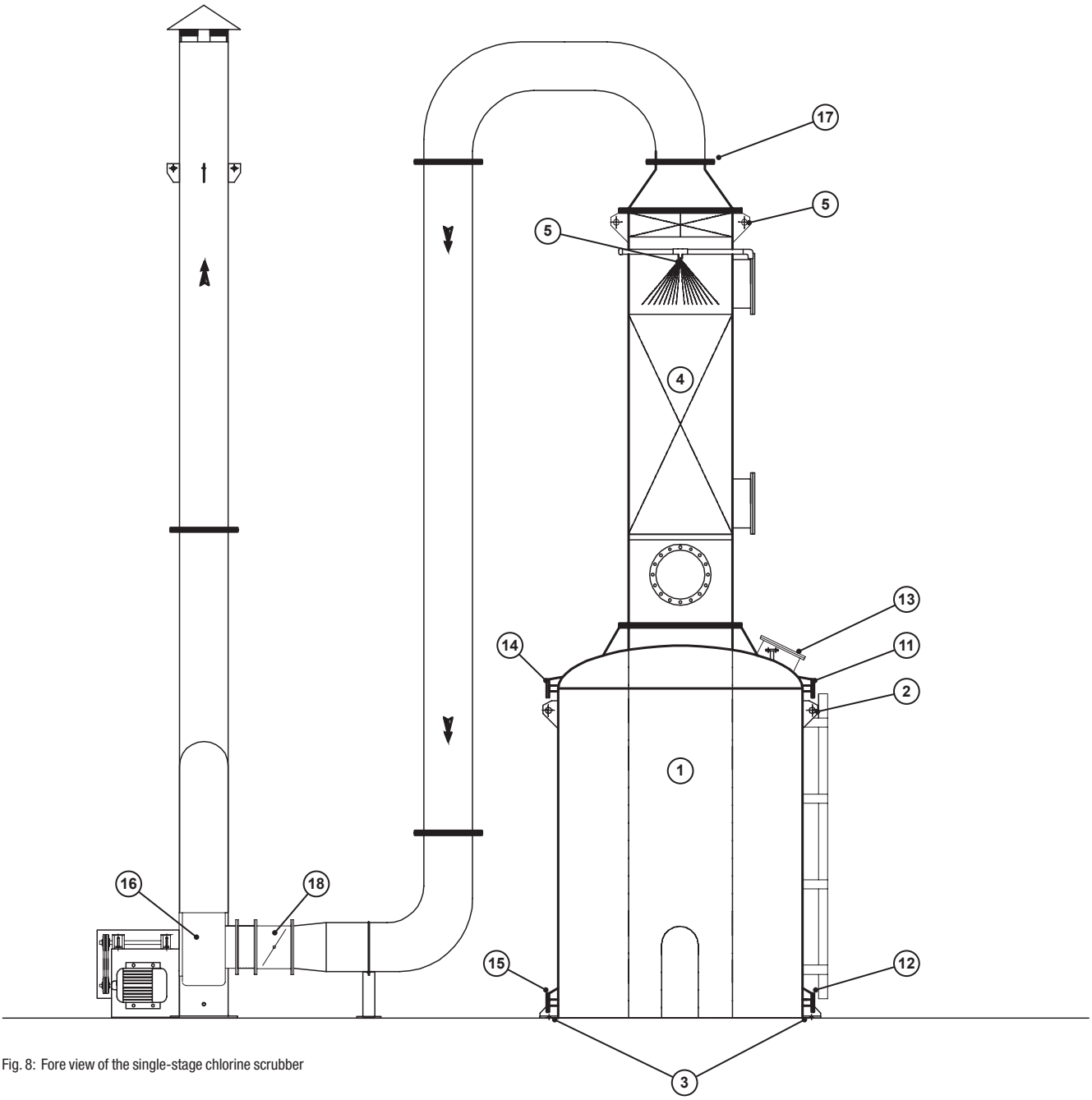

Fig. 8: Fore view of the single-stage chlorine scrubber

© Lutz-Jesco GmbH 2023

Item	Description
1	Container (NaOH)
2	Container lifting lugs
3	Container fastening clip
4	Packed column
5	Packed column lifting lugs
10	Spray nozzles
11	Upper flange of the fill level display
12	Lower flange of the fill level display
13	Input water flange
14	Flange overflow
15	Outflow flange
16	Fan
17	Air outlet flange
18	Ventilation flap

© Lutz-Jesco GmbH 2023
Subject to technical changes.
231205

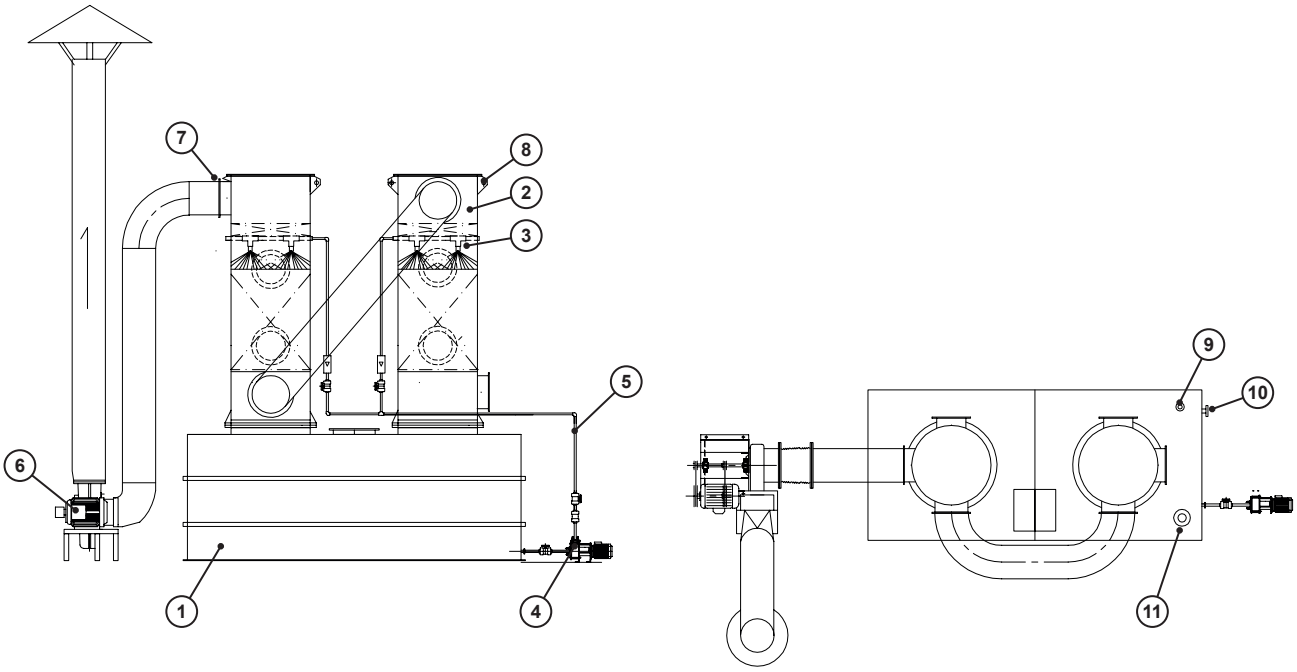

Fig. 9: Fore view and plan view of the two-stage chlorine scrubber

Item	Description
1	Container (NaOH)
2	Packed column
3	Spray nozzles
4	Circulation pump
5	Pipe connection to the spray nozzles
6	Fan
7	Air outlet flange
8	Packed column lifting lugs
9	Water inlet flange
10	Overflow / outflow
11	NaOH inlet flange

 © Lutz-Jesco GmbH 2023

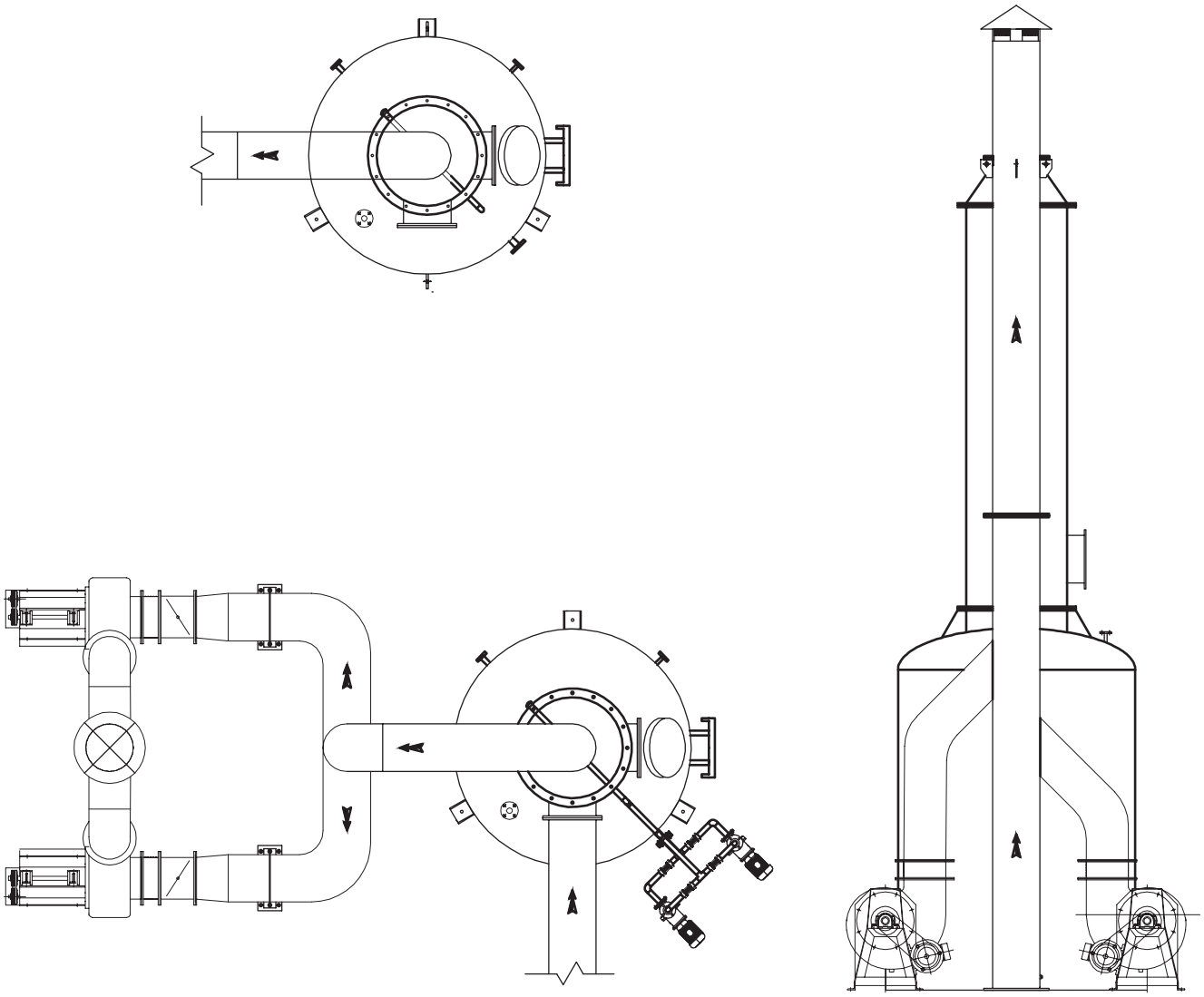

Fig. 10: Single-stage chlorine scrubber, two ventilators, two circulation pumps

14 Switching diagrams

14.1 Single-stage chlorine scrubber

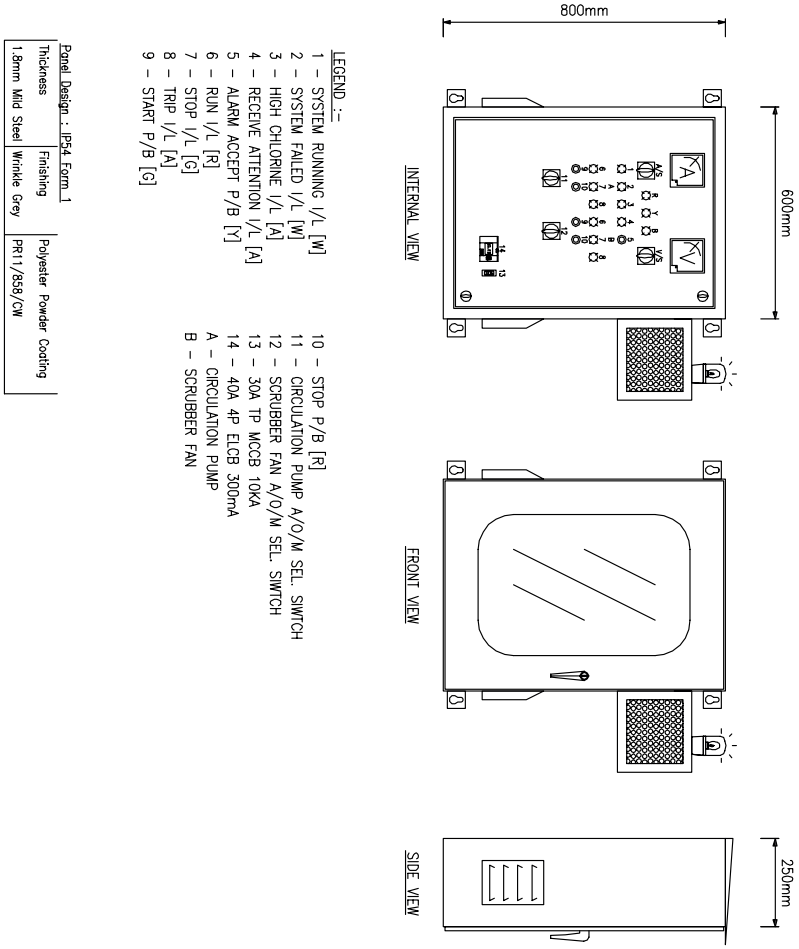

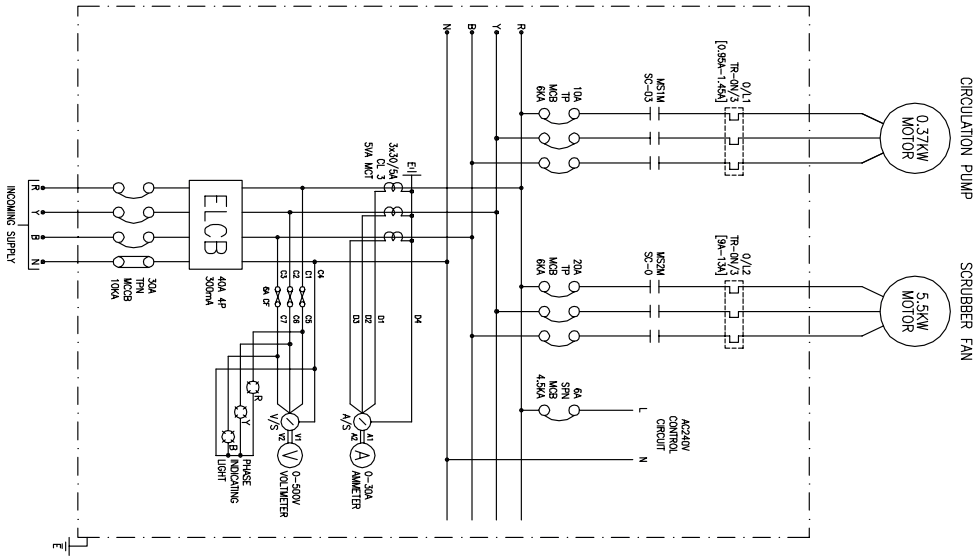

© Lutz-Jesco GmbH 2023

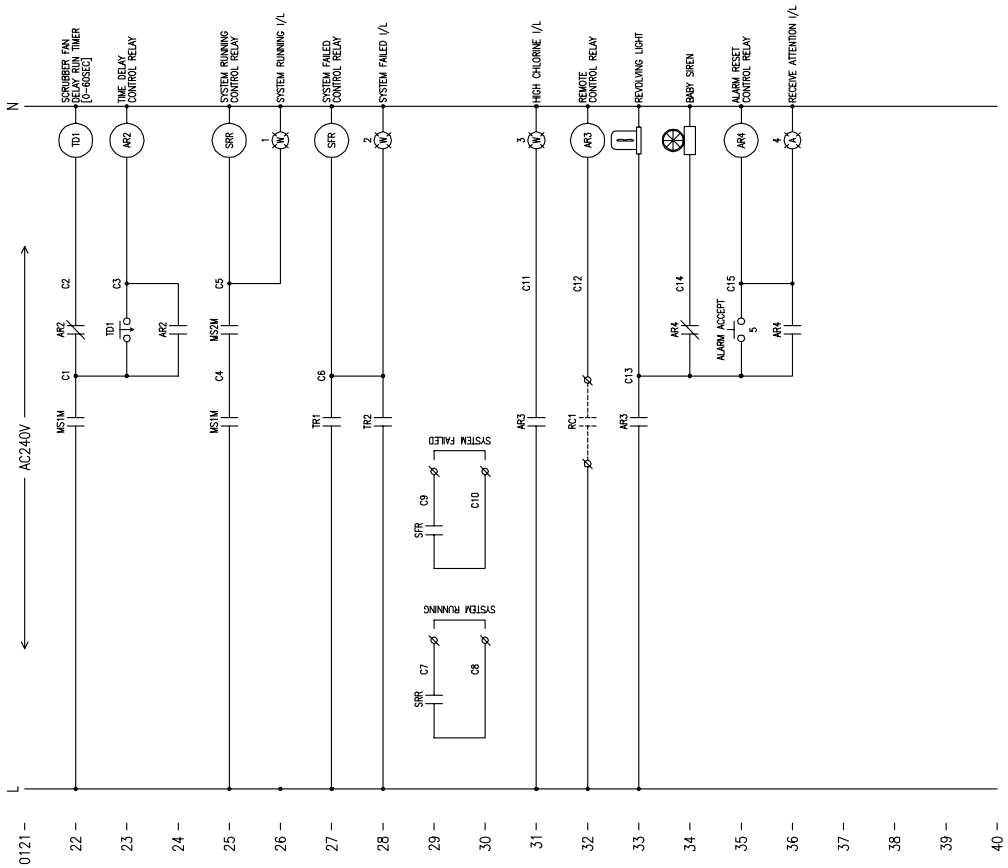
N
L
AC240V
SCRUBBER FAN DELAY RUN TIMER [0–60SEC]
TIME DELAY CONTROL RELAY
SYSTEM RUNNING CONTROL RELAY
SYSTEM RUNNING I/L
SYSTEM FAILED CONTROL RELAY
SYSTEM FAILED I/L
HIGH CHLORINE I/L
REMOTE CONTROL RELAY
REVOLVING LIGHT
BABY SIREN
ALARM RESET CONTROL RELAY
RECEIVE ATTENTION I/L
SYSTEM FAILED
SYSTEM RUNNING
ALARM ACCEPT

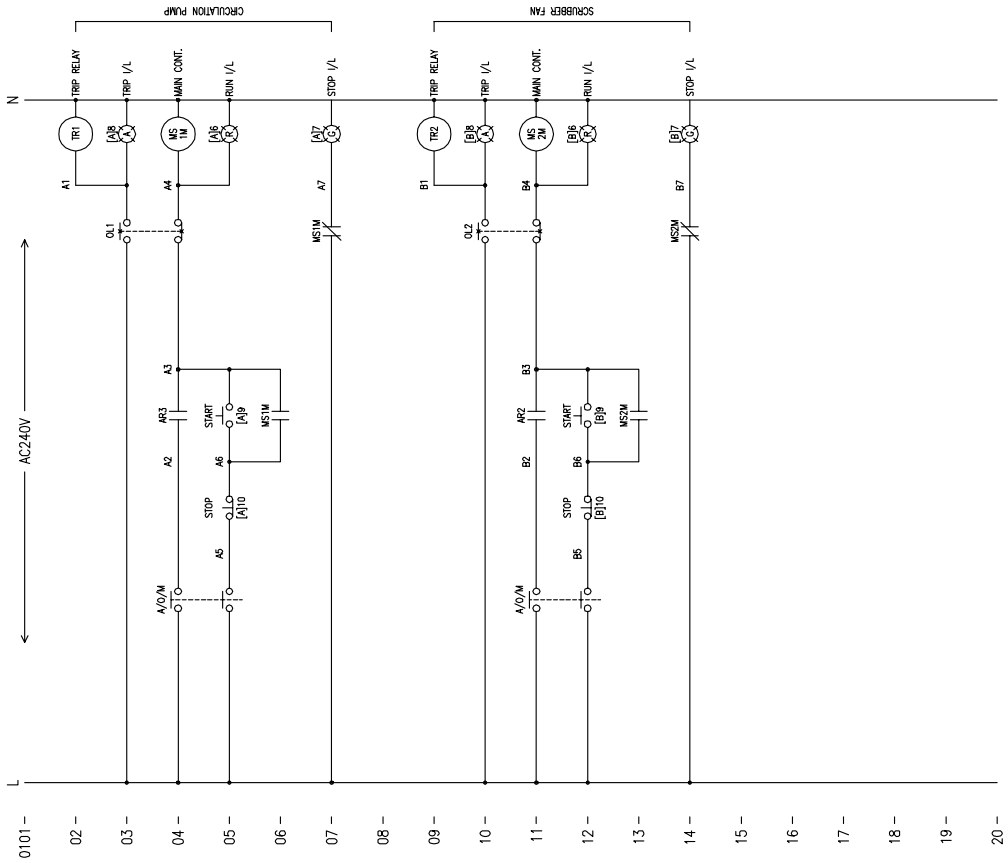
N
L
AC240V
CIRCULATION PUMP
SCRUBBER FAN
TRIP RELAY
TRIP I/L
MAIN CONT.
RUN I/L
STOP I/L
START
STOP
A/O/M

14.2 Two-stage chlorine scrubber

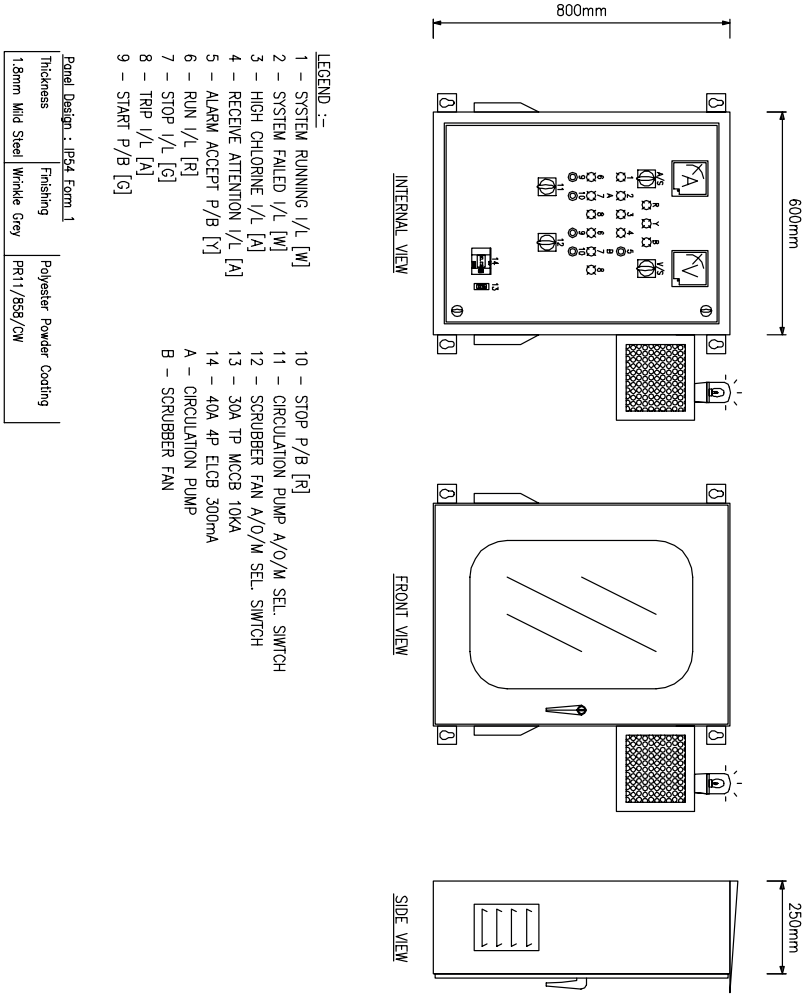

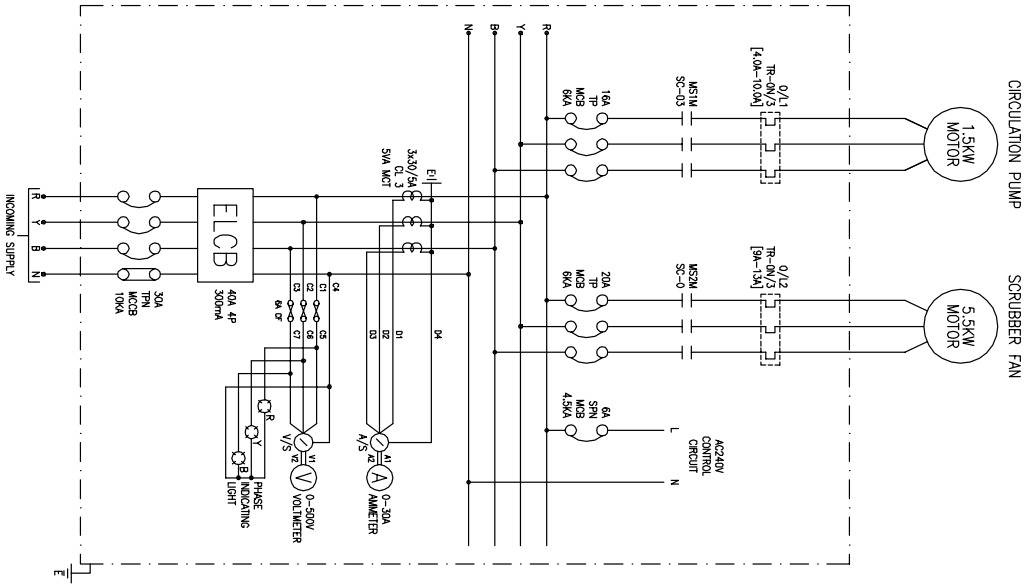

© Lutz-Jesco GmbH 2023

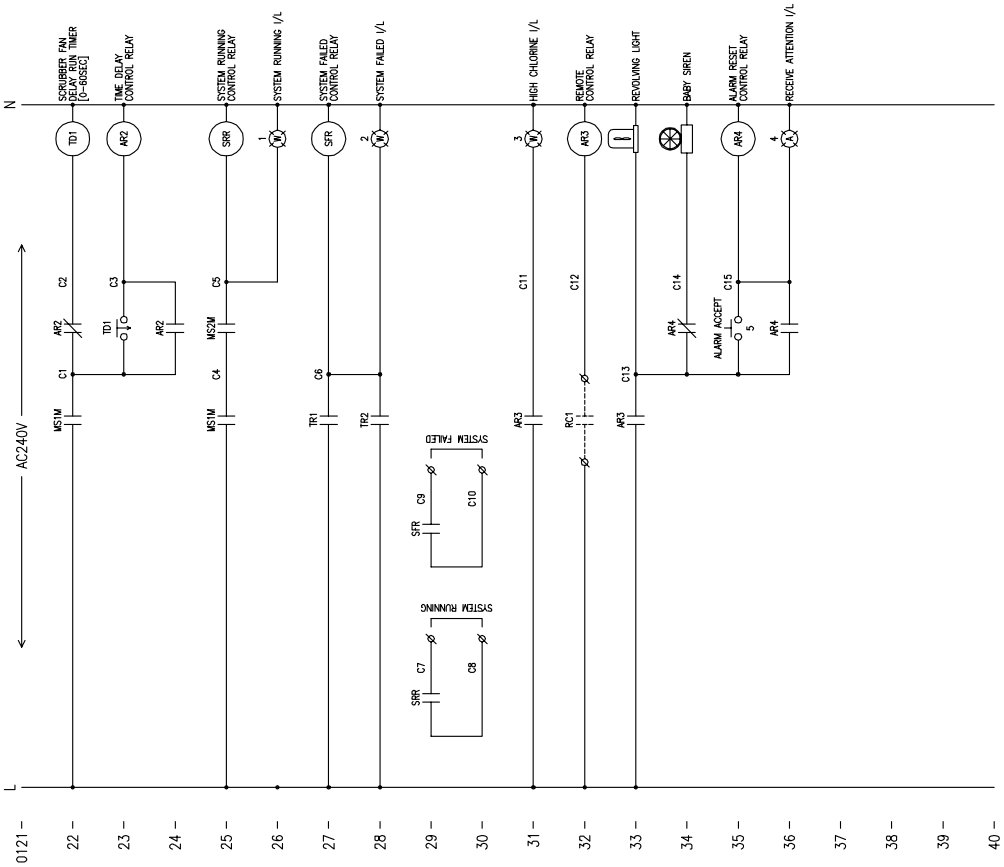
N
L
AC240V
SCRUBBER FAN DELAY RUN TIMER [0-60SEC]
TIME DELAY CONTROL RELAY
SYSTEM RUNNING CONTROL RELAY
SYSTEM RUNNING I/L
SYSTEM FAILED CONTROL RELAY
SYSTEM FAILED I/L
HIGH CHLORINE I/L
REMOTE CONTROL RELAY
REVOLVING LIGHT
BABY SIREN
ALARM RESET CONTROL RELAY
RECEIVE ATTENTION I/L
SYSTEM FAILED
SYSTEM RUNNING

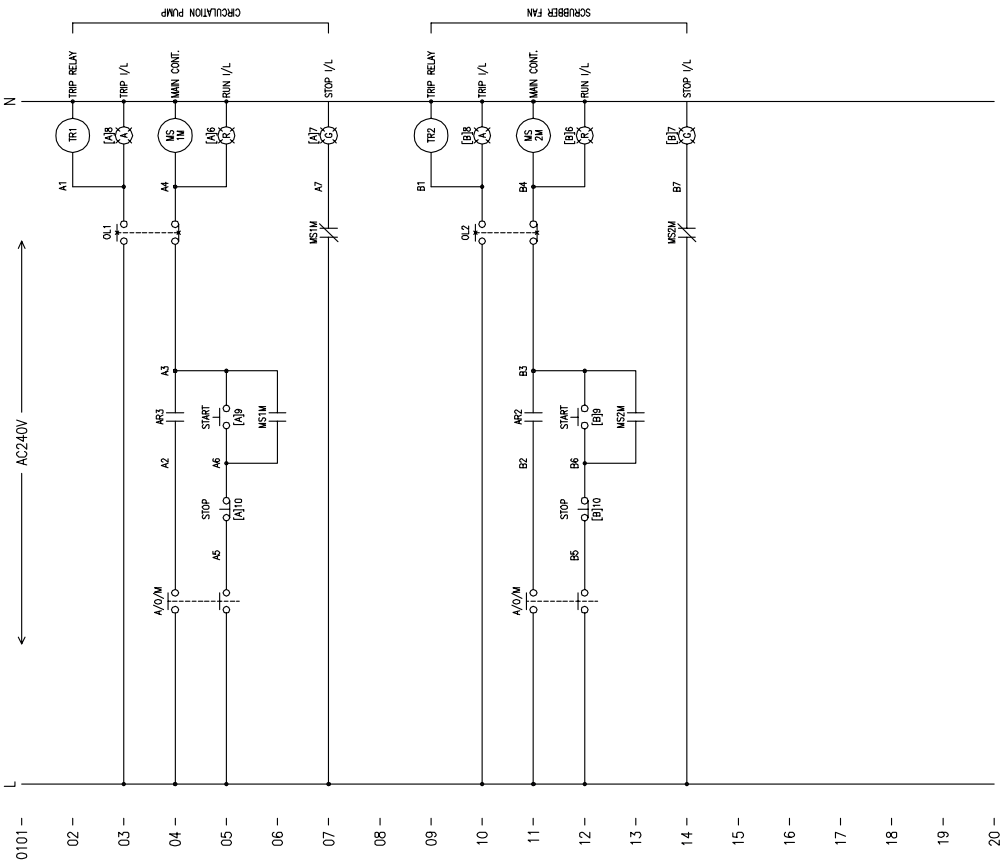
N
L
AC240V
CIRCULATION PUMP
SCRUBBER FAN
TRIP RELAY
TRIP I/L
MAN CONT.
RUN I/L
STOP I/L
START
STOP
A/O/M

15 Decontamination declaration

Please copy the declaration, stick it to the outside of the packaging and return it with the device.

Decontamination declaration

Please fill out a separate form for each appliance!

We forward the following device for repairs:

Device and device type: ..... Part-no.: .....

Order No.: ..... Date of delivery: .....

Reason for repair: .....

.....

.....

Dosing medium

Description: ..... Irritating: ☐ Yes ☐ No

Properties: ..... Corrosive: ☐ Yes ☐ No

We hereby certify, that the product has been cleaned thoroughly inside and outside before returning, that it is free from hazardous material (i.e. chemical, biological, toxic, flammable, and radioactive material) and that the lubricant has been drained.

If the manufacturer finds it necessary to carry out further cleaning work, we accept the charge will be made to us.

We assure that the aforementioned information is correct and complete and that the unit is dispatched according to the legal requirements.

Company / address: ..... Phone: .....

..... Fax: .....

..... Email: .....

Customer No.: ..... Contact person: .....

Date, Signature: .....

© Lutz-Jesco GmbH 2023

16 Warranty claim

Warranty claim

Please copy and send it back with the unit!

If the device breaks down within the period of warranty, please return it in a cleaned condition with the complete warranty claim.

Sender

Company: ..... Phone: ..... Date: .....

Address: .....

Contact person: .....

Manufacturer order no.: ..... Date of delivery: .....

Device type: ..... Serial number: .....

Nominal capacity / nominal pressure: .....

Description of fault: .....

.....

.....

.....

.....

.....

.....

.....

Service conditions of the device

Point of use / system designation: .....

.....

.....

Accessories used (suction line etc.): .....

.....

.....

.....

.....

Commissioning (date): .....

Duty period (approx. operating hours): .....

Please describe the specific installation and enclose a simple drawing or picture of the chemical feed system, showing materials of construction, diameters, lengths and heights of suction and discharge lines.

© Lutz-Jesco GmbH 2023
Subject to technical changes.

17 Index

C
Commissioning the device 16
Completing the installation 14
Control cabinet 9

D
Decontamination declaration 30
Dimensioned drawings 12
Dimensions 12

E
Electrical installation 14

F
Finishing maintenance 19

G
General warnings 5

H
Handling instructions
  Marking 4
Hazards due to non-compliance with the safety instructions 5
Hydraulic installations 14

I
Information about chlorine 5
Installation 14
  electrical 14
  hydraulic 14
Intended purpose 7
Intended use 7

M
Maintenance 19
  Finishing 19

N
Notes for the Reader 4

O
Operation 17

P
Personal protective equipment 6
Personnel qualification 6
Personnel tasks 6
Product description 8
Product warranty 7

S
Safety 5
Scope of delivery 8
Shutdown 19
Signal words
  Explanation 4
Specialist staff 6
Start-up 15
Structure of the device 8

T
Technical data 9
Test intervals 17
Trained electricians 6
Trained persons 6

W
Warnings
  General warnings 5
  Marking 4
Warning sign
  Explanation 4
Warranty claim 31
Working in a safety-conscious manner 5

 © Lutz-Jesco GmbH 2023

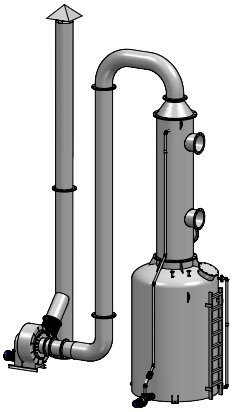

Lutz-Jesco GmbH

Am Bostelberge 19
D-30900 Wedemark

Phone: +49 5130 5802-0
info@lutz-jesco.com
www.lutz-jesco.com

Operating instructions
Chlorine scrubber

Copyright 2023 by Lutz-Jesco GmbH