Expansion system

Operating instructions

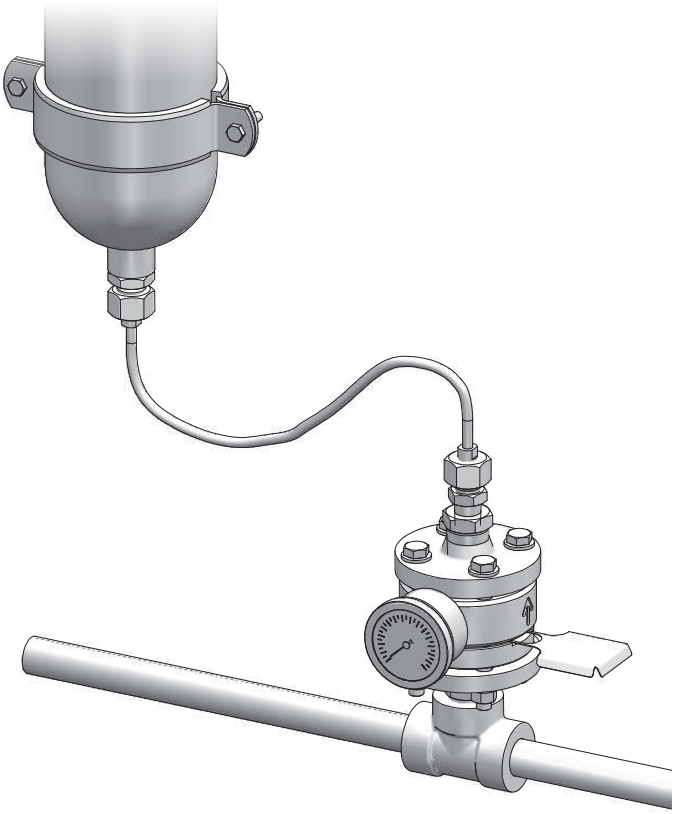

Read the operating manual!

The user is responsible for installation and operation related mistakes!

Original operating manual

© Lutz-Jesco GmbH 2015

BA-22801-02-V02

Dosieren Fördern Regeln | Flüssigkeiten Gase Systeme

Table of Contents

1 Notes for the Reader 4
1.1 General non-discrimination 4
1.2 Explanation of the signal words 4
1.3 Explanation of the warning signs 4
1.4 Identification of warnings 4
1.5 Instruction for action identification 5

2 Safety 6
2.1 General warnings 6
2.2 Information about chlorine 6
2.3 Hazards due to non-compliance with the safety instructions 7
2.4 Working in a safety-conscious manner 7
2.5 Personal protective equipment 7
2.6 Personnel qualification 7

3 Intended Use 9
3.1 Notes on product warranty 9
3.2 Intended purpose 9
3.3 Device revision 9
3.4 Impermissible media 9

4 Product description 10
4.1 Scope of delivery 10
4.2 Design and function 10

5 Technical data 12

6 Dimensions 13
6.1 Rupture disk 13
6.2 Flexible connection line 13
6.3 Expansion tank 14

7 Installation 15
7.1 Installation location 15
7.2 Installing the device 16
7.3 Connecting the contact pressure gauge 19
7.4 Adjusting the switch point of the contact pressure gauge 19
7.5 Completing the installation 19
7.6 Installation example 20

8 Start-up 21
8.1 Inspecting the pressure system 21

9 Operation 23
9.1 Normal mode 23
9.2 Shut-down with a chlorine alarm 23
9.3 Measures against a broken rupture disk 23
9.4 Inspection intervals 23

10 Shutdown 24
10.1 Short-term shutdown 24
10.2 Long-term shutdown 24
10.3 Storage 24
10.4 Disposal of old equipment 24

11 Maintenance 25
11.1 Maintenance intervals 25
11.2 Maintenance accessories 26
11.3 Preparing the system for maintenance 26
11.4 Maintenance of the components 26
11.5 Finishing maintenance 28

12 Troubleshooting 29

13 Spare parts 30
13.1 Maintenance sets 31

14 Notes to EC conformity 32

15 Declaration of no objection 33

16 Warranty claim 34

Index 35

© Lutz-Jesco GmbH 2015
Subject to technical changes.
150209

1 Notes for the Reader

This operating manual contains information and behaviour rules for the safe and designated operation of the device.

Observe the following principles:

- read the entire operating manual prior to starting-up the device.
- Ensure that everyone who works with or on the device has read the operating manual and complies with its specifications.
- Maintain the operating manual throughout the service life of the device.
- Pass the operating manual on to any subsequent owner of the device.

1.1 General non-discrimination

In this operating manual, only the male gender is used where grammar allows gender allocation. The purpose of this is to make the text easy to read. Men and women are always referred to equally. We would like to ask female readers for understanding of this text simplification.

1.2 Explanation of the signal words

Different signal words in combination with warning signs are used in this operating manual. Signal words illustrate the gravity of possible injuries if the risk is ignored:

Signal word	Meaning
DANGER!	Refers to imminent danger. Ignoring this sign may lead to death or the most serious injuries.
WARNING	Refers to a potentially hazardous situation. Failure to follow this instruction may lead to death or severe injuries.
CAUTION	Refers to a potentially hazardous situation. Failure to follow this instruction may lead to minor injury or damage to property.
Note	Refers to a danger which, if ignored, may lead to risk to the machine and its function.

Table 1: Explanation of the signal words

1.3 Explanation of the warning signs

Warning signs represent the type and source of a danger:

Warning sign	Type of danger
	Danger to life from chlorine poisoning
	General danger zone
	Danger of damage to machine or functional influences

Table 2: Explanation of the warning signs

1.4 Identification of warnings

Warnings are intended to help you recognise risks and avoid negative consequences.

This is how warnings are identified:

Warning sign	**SIGNAL WORD**

Description of danger.

Consequences if ignored.

⇨ The arrow signals a safety precaution to be taken to eliminate the danger.

© Lutz-Jesco GmbH 2015

1.5 Instruction for action identification

This is how pre-conditions for action are identified:

✓ Pre-condition for action which must be met before taking action.

🛠 A resource such as a tool or auxiliary materials required to perform the operating instructions.

This is how instructions for action are identified:

➔ Separate step with no follow-up action.

1. First step in a series of steps.
2. Second step in a series of steps.

▸ Result of the above action.

✓ **Action completed, aim achieved.**

© Lutz-Jesco GmbH 2015
Subject to technical changes.
150209

2 Safety

2.1 General warnings

The following warnings are intended to help you to eliminate the dangers that can arise while handling the device. Risk prevention measures always apply regardless of any specific action.

Safety instructions warning against risks arising from specific activities or situations can be found in the respective sub-chapters.

DANGER!

Danger to life from chlorine poisoning!

Chlorine is poisonous. In severe cases, breathing in chlorine may lead to death. It irritates the eyes, the respiratory system and the skin.

- ⇨ Use sufficient personal protective equipment.
- ⇨ When carrying out any work on the system, use a respirator mask with a Type B gas filter that complies with EN 14387.
- ⇨ Always comply with the accident prevention regulations that apply at the place of use.
- ⇨ Get rid of leaks without delay. You must get rid of even very minor leaks without delay. Together with the humidity, chlorine forms hydrochloric acid and corrosion results in rapidly increasing leakage.
- ⇨ Use only chlorine-resistant seals.
- ⇨ Only use seals once. Reusing them leads to leaks.

DANGER!

Danger to life from chlorine poisoning!

Chlorinators without gas warning devices are an increased safety risk, since it is not possible to detect escaping chlorine gas in good time or at all.

- ⇨ Install a gas warning device.

WARNING

Increased risk of accidents due to insufficient qualification of personnel!

Chlorinators and their accessories must only be installed, operated and maintained by personnel with sufficient qualifications. Insufficient qualification will increase the risk of accidents.

- ⇨ Ensure that all action is taken only by personnel with sufficient and corresponding qualifications.
- ⇨ Prevent access to the system for unauthorised persons.

Note

Damage to the plant due to the formation of hydrochloric acid

Chlorine gas is highly hygroscopic. This means that humidity enters the system at any open connection on devices or pipes, which results in the formation of hydrochloric acid and contamination, thus inevitably causing damage to the units.

- ⇨ Keep all connections (including in the vacuum system and on all devices not currently in use) closed at all times.

2.2 Information about chlorine

Chlorine is a hazardous substance. The chemical element chlorine is a greenish-yellow, toxic gas with a pungent odour, which can be detected in the air at concentrations below 1 ppm (= 1 ml/m³).

Chlorine is 2.5 times heavier than air and accumulates at ground level.

Chlorine is extremely toxic for water organisms. The reason for the toxicity of chlorine is its extraordinary reactivity. It reacts with animal and vegetable tissue and thus destroys it.

Air with a chlorine gas content of 0.51% leads to a quick death in mammals and humans, as it attacks the respiratory tract and the pulmonary alveolus (formation of hydrogen chloride or hydrochloride acid).

Note

Faults due to insufficient chlorine quality

Impurities in the chlorine gas form deposits in devices and valves and can attack the components chemically. This can lead to malfunctions.

- ⇨ Only use technically pure chlorine that meets the following requirements:
  - Mass content of chlorine at least 99.5%
  - Water content max. 20 mg/kg

  Chlorine that complies with EN 937 meets these requirements

© Lutz-Jesco GmbH 2015

2.3 Hazards due to non-compliance with the safety instructions

Failure to follow the safety instructions may endanger not only persons, but also the environment and the device.

The specific consequences can be:

- failure of important functions of the device and of the corresponding system,
- failure of required maintenance and repair methods,
- Danger to persons,
- danger to the environment caused by substances leaking from the system.

2.4 Working in a safety-conscious manner

Besides the safety instructions specified in this operating manual, further safety rules apply and must be followed:

- accident prevention regulations
- safety and operating provisions,
- safety regulations on handling hazardous substances,
- environmental protection provisions,
- applicable standards and legislation.

2.5 Personal protective equipment

Based on the degree of risk posed by the dosing medium and the type of work you are carrying out, you must use corresponding protective equipment. Read the Accident Prevention Regulations and the Safety Data Sheets to the dosing media find out what protective equipment you need.

As a minimum, the following protective equipment is recommended:

Protective mask

protective clothing

Protective gloves

safety shoes

Corresponding protective equipment must be used during these tasks:

- commissioning,
- all work on gas-bearing sections of the plant
- changing the chlorine gas containers,
- shutdown,
- maintenance work,
- disposal.

DANGER!

Danger to life from chlorine poisoning!

If chlorine gas escapes, a filter mask is ineffective, since it is not a self-contained breathing apparatus.

⇨ If chlorine gas escapes, wear a Type 2 self-contained breathing apparatus that complies with EN 137.

2.6 Personnel qualification

Any personnel who work on the device must have appropriate special knowledge and skills.

Anybody who works on the product must meet the conditions below:

- attendance at all the training courses offered by the owner,
- personal suitability for the respective activity,
- sufficient qualification for the respective activity,
- training in how to handle the device,
- knowledge of safety equipment and the way this equipment functions,
- knowledge of this operating manual, particularly of safety instructions and sections relevant for the activity,
- knowledge of fundamental regulations regarding health and safety and accident prevention.

All persons must generally have the following minimum qualification:

- training as specialists to carry out work on the device unsupervised,
- sufficient training that they can work on the device under the supervision and guidance of a trained specialist.

These operating instructions differentiate between these user groups:

2.6.1 Specialist staff

Specialist staff are able, thanks to their professional training, knowledge and experience as well as knowledge of the respective provisions, to do the job allocated to them and recognise and/or eliminate any possible dangers by themselves.

2.6.2 Trained electricians

Due to their professional training, knowledge and experience as well as knowledge of specific standards and provisions, trained electricians are able to do the electrical work assigned to them and to recognise and avoid any any potential dangers by themselves.

They are specially trained for their specific working environment and are familiar with relevant standards and provisions.

They must comply with the legally binding regulations on accident prevention.

2.6.3 Trained persons

Trained persons have received training from the operator about the tasks they are to perform and about the dangers stemming from improper behaviour.

Trained persons have attended all trainings offered by the operator.

© Lutz-Jesco GmbH 2015
Subject to technical changes.
150209

2.6.4 Personnel tasks

In the table below you can check what qualifications are the pre-condition for the respective tasks. Only people with appropriate qualifications are allowed to perform these tasks!

Qualification	Activities
Specialist staff	■ Transportation ■ Assembly ■ Hydraulic installations ■ Commissioning ■ Control ■ Taking out of operation ■ Fault rectification ■ Maintenance ■ Repairs ■ Disposal
Trained electricians	■ Electrical installation ■ Rectifying electrical faults ■ Electrical repairs
Trained persons	■ Storage

Table 3: Personnel qualification

© Lutz-Jesco GmbH 2015

3 Intended Use

3.1 Notes on product warranty

Any non-designated use of the device can impair its function and the protection provided. This leads to invalidation of any warranty claims!

Please note that liability is on the side of the user in the following cases:

- the device is operated in a manner which is not consistent with these operating instructions, particularly safety instructions, handling instructions and the section "Intended Use".
- Information on usage and environment (see section 5 „Technical data“ on page 12) is not adhered to.
- if people operate the device who are not adequately qualified to carry out their respective activities.
- No original spare parts or accessories of Lutz-Jesco GmbH are used.
- Unauthorised changes are made to the device.
- The user uses different dosing media than those indicated in the order.
- Maintenance and inspection intervals are not adhered to as required or not adhered to at all.
- The device is commissioned before it or the corresponding system has been correctly and completely installed.
- Safety equipment has been bridged, removed or made inoperative in any other way.

3.2 Intended purpose

The expansion system is designed exclusively for piping and devices using fluid chlorine. It serves to protect the system from excess pressure resulting from the thermal expansion of the medium.

3.3 Device revision

This operating manual applies to the following devices:

Device	Month / year of manufacture
Expansion system with rupture disk and contact pressure gauge	After 09/2013

Table 4: Device revision

The production date is indicated on the rating plate.

3.4 Impermissible media

The device must not be used for the following media and substances:

- all media apart from liquid and gaseous chlorine
- not technically pure chlorine with a mass content of less than 99.5%

© Lutz-Jesco GmbH 2015
Subject to technical changes.
150209

4 Product description

4.1 Scope of delivery

Carefully check the delivery prior to installation and refer to the delivery note to ensure the delivery is complete and to check for any transport damage. Contact the supplier and/or carrier regarding any questions concerning the delivery and/or transport damage. Do not operate defective devices.

The scope of delivery includes:

- Rupture disk
- Rupture disk bracket
- Flexible connection line (optional)
- Expansion tank with wall bracket (optional)
- Contact pressure gauge
- Distribution box for connection of the contact pressure gauge
- Flange with seals and screws
- Thread fittings for integration in the pipe line
- Liquid thread sealant
- Operating instructions

4.2 Design and function

4.2.1 Structure of the expansion system

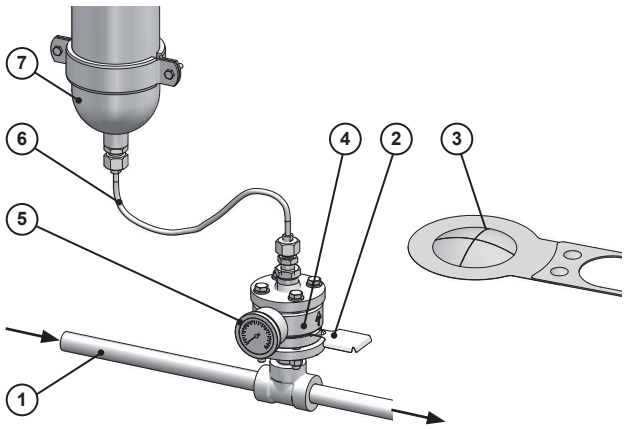

Fig. 1: Components of the expansion system

Position	Description
1	Process line with fluid chlorine
2	Rupture disk in the fitting
3	Notches in the rupture disk
4	Rupture disk bracket
5	Contact pressure gauge
6	Flexible connection line
7	Expansion tank

Table 5: Components of the expansion system

4.2.2 Function description

Under the influence of heat, liquid chlorine expands considerably, creating extremely high pressure. As a result, all piping systems for fluid chlorine must be protected from excess pressure. Expansion systems are typically installed in the following locations:

- On every pipe piece for fluid chlorine which can be sealed on two sides.
- On the chlorine evaporator

Expansion systems consist of three main components:

Rupture disk

The rupture disk is a domed metal disk jammed between flanges. When the rupture pressure has been reached, the metal fractures at the notched location thereby relieving the pressure system.

Rupture disks provide highly reliable protection against excess pressure as they do not have any moving parts which could become stiff due to soiling or corrosion.

A number of rupture disks are not vacuum-resistant and are destroyed when the system is evacuated by the injector. The rupture disk used is vacuum-resistant.

Expansion tank

The expansion tank traps the chlorine behind the rupture disk and prevents the release of chlorine. The tank must hold a minimum of 20 % of the pipe capacity, which is to be secured against excess pressure. This value takes into account the warming of the fluid chlorine to up to 70°C.

Pipe line or device to be protected	Volume in the pipe line or in the device	Required volume of the expansion tank
10 m pipe nominal width 1“	5 dm³	1 dm³
100 m pipe DN1“	50 dm³	10 dm³
Chlorine filter	e.g. 0.5 dm³ volume	0.1 dm³
Chlorine evaporator	e.g. 9 dm³ volume	1.8 dm³

Table 6: Volume of the expansion tank

For an example installation of a chlorine evaporator with a 10m pipe line with a nominal width of 1", an expansion tank with a minimum of 2.8 dm³ is required. 10 dm³ is selected.

The expansion tank is connected with a flexible line so that the rupture disk can be replaced with little effort.

© Lutz-Jesco GmbH 2015

Contact pressure gauge

The contact pressure gauge displays the pressure in the expansion tank. In normal operating conditions, it is 0 bar. After the rupture disk has broken, the pressure gauge shows the operating pressure of the system.

The contact enables electrical signalling and remote indication or a broken rupture disk. A useful application for the signal from the contact pressure gauge is e.g.

- To raise the alarm in the installation room
- Informing the control room
- Starting an automatic closure system in the chlorine drum valves.

The consumer should not be switched off. You can reduce the excess pressure and prevent further damage or dangers.

4.2.3 Rating plate

The rating plate contains information on the safety and functional method of the product. The rating plate must be kept legible for the duration of the service life of the product.

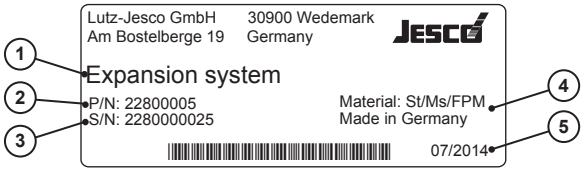

Fig. 2: Rating plate Expansion system

No.	Description
1	Product name
2	Part number
3	Serial number
4	Components coming into contact with the media
5	Month/year of manufacture

Table 7: Rating plate Expansion system

© Lutz-Jesco GmbH 2015
Subject to technical changes.
150209

5 Technical data

Rupture disk	
Material of the rupture disk	MONEL
Material of the rupture disk bracket	Galvanic coated brass
Opening pressure	22.5 bar (at 20 °C) 21.8 bar (at 50 °C) 20.9 bar (at 100 °C)
Tolerance	± 10 %
Vacuum-resistant	Yes
Nominal width	DN 25
Contact pressure gauge	
Material in contact with the media	Steel, galvanic coated / silver
Housing	Plastic
Nominal size	Ø 63 mm
Measuring range	0-40 bar
Accuracy	± 2.5 %
Contact load rating	50 V / 0.5 A, 10 W
Switch direction	NC (unpressurised contact connection).
Flexible connection line	
Nominal width	DN 6
Material	Copper, galvanic coated
Pressure stage	PN 40
Expansion tank	
Material	Steel, exterior painted
Test pressure	300 bar
For all units	
Permissible ambient temperature	0-60°C

Table 8: Technical data

Weights	
Rupture disk with bracket, flanges and threaded connections	approx. 8 kg
Contact pressure gauge	approx. 0.3 kg
Flexible connection line with union nut	L = 2 m: approx. 0.6 kg L = 6 m: approx. 1 kg
Expansion tank with wall brackets	10 dm^3: approx. 15 kg 20 dm^3: approx. 30 kg

Table 9: Weights

© Lutz-Jesco GmbH 2015

6 Dimensions

All dimensions in mm

6.1 Rupture disk

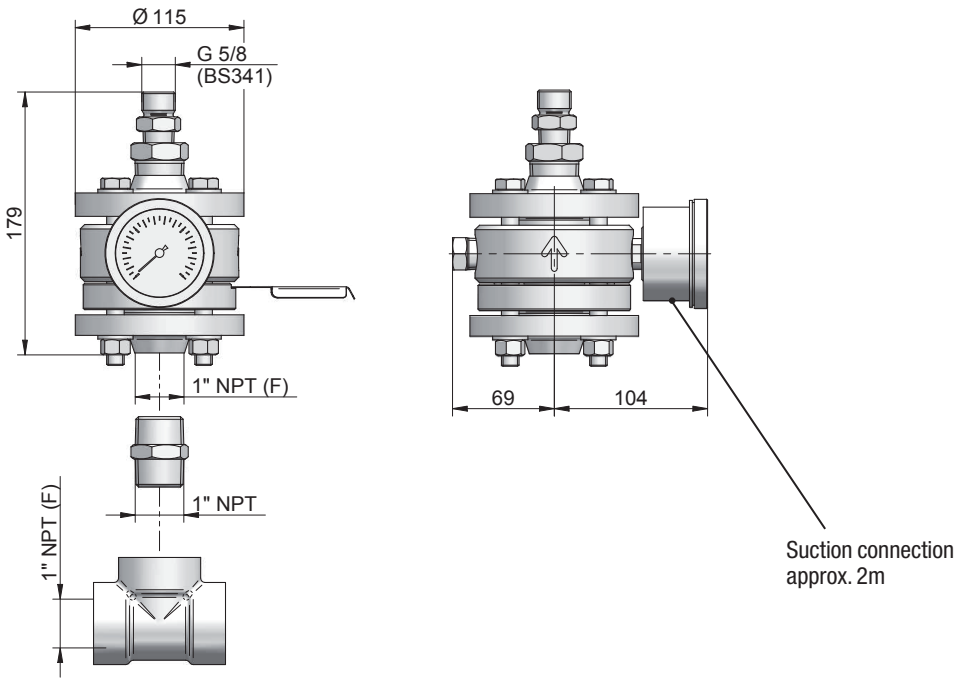

Fig. 3: Dimensioned drawing of the rupture disk in its bracket

6.2 Flexible connection line

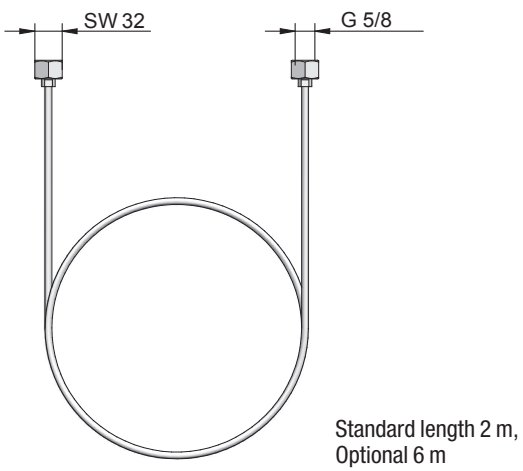

Fig. 4: Dimensioned drawing of the flexible connection line

© Lutz-Jesco GmbH 2015
Subject to technical changes.
150209

6.3 Expansion tank

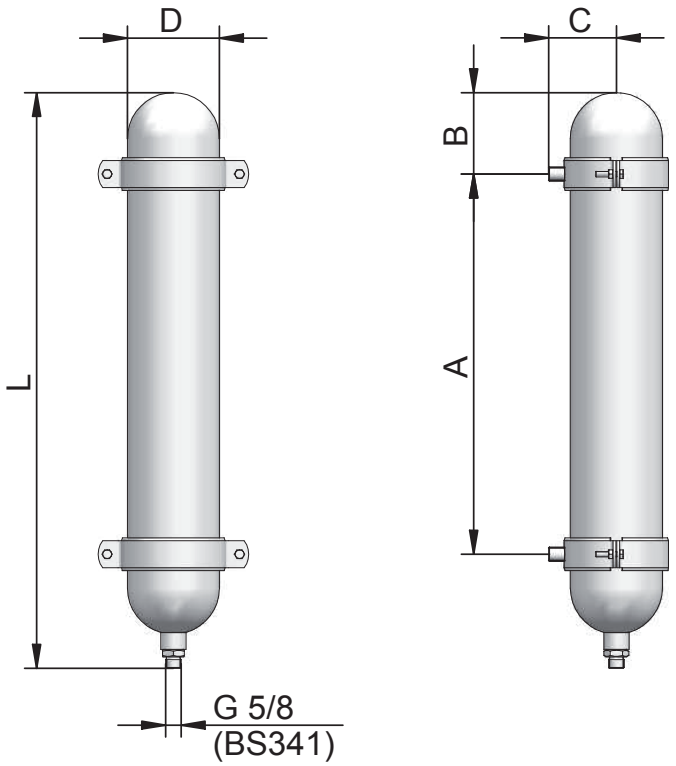

Fig. 5: Dimensioned drawing of the expansion tank

Scale	10 dm³	20 dm³
L	850 approx.	815 approx.
D	135	204
A	560 approx.	520 approx.
B	120 approx.	150 approx.
C	100 approx.	135 approx.

Table 10: Dimensions of the expansion tank

© Lutz-Jesco GmbH 2015

7 Installation

DANGER!

Danger to life from chlorine poisoning!

Under the influence of heat, liquid chlorine expands considerably. An impermissible high pressure can occur if a pipe line or a system component is filled with liquid chlorine and all inputs and outputs are closed. This can cause system parts to burst, causing chlorine to escape.

⇨ In each section of the system where liquid chlorine can be trapped, install an expansion system.

⇨ In this case, relief may only be performed into a safe environment, e.g. in an expansion tank made of steel. The container should be brand-new and must be capable of accommodating at least 20 % of the line volume.

DANGER!

Danger to life from chlorine poisoning!

Chlorinators without gas warning devices are an increased safety risk, since it is not possible to detect escaping chlorine gas in good time or at all.

⇨ Install a gas warning device.

WARNING

Increased risk of accidents due to insufficient qualification of personnel!

Chlorinators and their accessories must only be installed, operated and maintained by personnel with sufficient qualifications. Insufficient qualification will increase the risk of accidents.

⇨ Ensure that all action is taken only by personnel with sufficient and corresponding qualifications.

⇨ Prevent access to the system for unauthorised persons.

Note

Damage to the system due to incorrect installation

The failure to observe installation instructions (e.g. use of unsuitable tools, incorrect torque) can damage the system parts.

⇨ Use suitable tools.

⇨ Note the specified torque.

7.1 Installation location

The expansion system is fitted in the room of the chlorine supply.

The room must fulfil the following minimum requirements:

- secured against access by unauthorised persons,
- protected against weather conditions,
- frost-free,
- permissible ambient temperature adhered to (see section 5 „Technical data“ on page 12),
- room of sufficient size to allow trouble-free assembly as well as inspection and maintenance of the device at all times,
- good ventilation of the room
- the room must comply with the locally valid prescriptions

© Lutz-Jesco GmbH 2015
Subject to technical changes.
150209

7.2 Installing the device

The rupture disk unit with the pressure gauge is fitted directly on the chlorine carrying pipe line and is carried by the pipe line The optional expansion tank is fitted to the wall and connected with a flexible connection line. The best installation locations are outlined in the example installation (Fig. 12).

7.2.1 Pre-fitting the rupture disk bracket

Note

Destruction of the rupture disk

The test pressure could exceed the rupture pressure of the rupture disk during the leakage test with nitrogen. The rupture disk is destroyed in the process.

⇨ First, fit the rupture disk bracket without the rupture disk. The rupture disk should be installed only after passing a leak test with nitrogen.

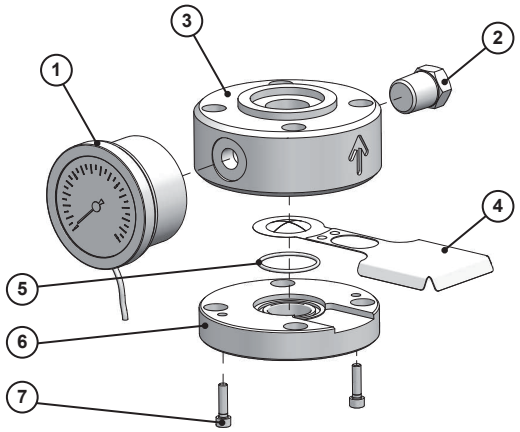

Fig. 6: Pre-fitting the rupture disk bracket

Resources required:

- Silicone grease
- PTFE strip

Perform the following working steps:

1. Screw the pressure gauge (1) and the plugs (2) in the upper section (3) with approx. three long PTFE strips. Tightening torque approx. 30 Nm
2. Grease the O-ring (5) lightly with silicone grease and insert it in the tongue in the lower section (6).

Only perform step 3 if the leakage test with nitrogen has been completed.

3. Insert the rupture disk (4) on the O-ring with the dome pointing upwards
4. Place on the upper section (3).
   - The arrows on the upper section (3) and the rupture disk (4) point in the same direction.
5. Turn the unit and insert the screws (7). Only tighten them by hand.
   - An even gap develops between the lower section (6) and the upper section (3).

✓ **Rupture disk bracket pre-fitted.**

7.2.2 Fitting the flange on the pipe

The rupture disk bracket is fitted with a tongue and groove between the flanges DN25/PN40. The groove flange fits on the input of the rupture disk bracket; the tongue flange on the output (see Fig. 8).

If a suitable flange is not present on the pipe system, fit the flange included in the scope of delivery. The fittings from the scope of delivery can be used.

7.2.2.1 Creating the threaded connection

DANGER!

Danger to life from chlorine poisoning!

Pipe connections and fittings in pressurized lines must be sealed with chlorine-resistant substances. Unsuitable sealants react with the chlorine and lead to leakages.

⇨ Use only sealants that are resistant in contact with chlorine (e.g. anaerobic sealants).

Pre-conditions for actions:

- ✓ The inside of the line is clean and dry.
- ✓ The threads are metallic bright.

Resources required:

- Grease-dissolving cleaning agent
- Liquid thread sealant

Perform the following working steps:

1. Clean the thread with a fat-dissolving cleaning agent, e.g. alcohol.
2. Allow the thread to dry completely.

© Lutz-Jesco GmbH 2015

3. Apply the thread sealant to the external thread in a circular motion to the start of the thread. Leave the first thread clear. Apply the thread sealant all the way down to the root of the thread to thoroughly grease the thread flank.

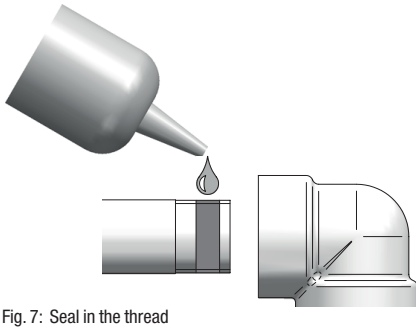

Fig. 7: Seal in the thread

Note

Leakage due to incorrect installation

To ensure that the connection is correctly aligned, it is necessary under certain circumstances to turn the thread anticlockwise. When the connection is loosened, bubbles form in the adhesive, which can lead to leakages.

⇨ Only turn the thread anti-clockwise.

⇨ If the orientation is not correct after the connection has been tightened, repeat steps 1 – 5.

4. Insert the threaded pin into the internal thread and apply a little thread sealant to the internal thread. Screw the parts by hand.
5. Use a tool to tighten the connection. The necessary tightening torque depends on the thread size.

thread	Tightening torque
¼“ NPT	up to 50 Nm
½“ NPT	up to 100 Nm
1" NPT	up to 150 Nm

Table 11: Tightening torque

6. Remove excess thread sealant with a cloth.
7. Allow the bond to harden for at least 12 hours prior to the leak test.

✓ **The threaded connection is now complete.**

7.2.3 Fitting the rupture disk bracket in the flange

Pre-conditions for actions:

✓ The rupture disk bracket is pre-mounted.

✓ A suitable flange connection is present on the pipe system.

✓ The chlorine carrying pipe line is supported sufficiently.

✓ The sealing surfaces are free of contamination and damage.

✓ Seals must be clean, undamaged and dry.

✓ Bolts, nuts and washers are clean and undamaged.

Any bolts, nuts and washers that are removed during assembly work must be replaced with new ones if they are damaged. Used bolts, nuts and washers may only be installed if they are in new condition.

Resources required:

- Torque key SW19 20-50 Nm
- Fitting grease or PTFE grease

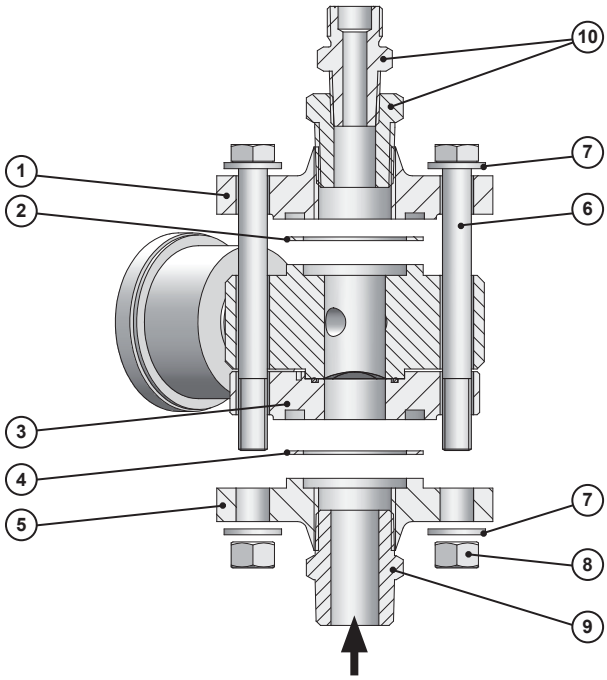

Fig. 8: Fitting the rupture disk bracket in the flange

Perform the following working steps:

1. Lubricate the sliding faces and thread of bolts, nuts and washers and in the threads e.g. using fitting grease or PTFE grease.
2. Place the flat gasket (4) on the groove flange (5). Assemble the seal in dry condition.
3. Fit the pre-mounted rupture disk bracket (3).
4. Place the flat gasket (2) on the rupture disk bracket and fit the tongue flange (1).
5. Fit the bolts (6), washers (7) and nuts (8) by hand.
6. Tighten the bolts evenly alternately crosswise in three stages: 20 Nm, 35 Nm, 50 Nm. After this, retighten all the bolts to the full target tightening torque (50 Nm).
7. Setting the seal (adapting to the flange seal surface) can make it necessary to retighten the bolts. For this reason, retighten the bolts to 50 Nm after a few hours.

✓ **Rupture disk bracket fitted in the flange.**

© Lutz-Jesco GmbH 2015
Subject to technical changes.
150209

The reduction pieces (10) are used on the output flange unless another installation is not planned. They are fitted with liquid thread sealant in accordance with chapter 7.2.2.1

7.2.4 Fitting the expansion tank

The expansion tank is fitted to the wall in pipe clamps. The direction depends on use:

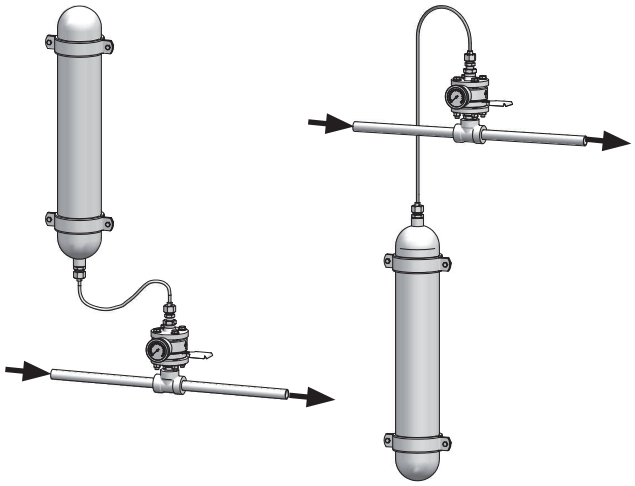

Fig. 9: Aligning the expansion tank

Use for (for piping)	Tank connection	Reason (for chlorine evaporators)
Pipe lines	Downwards	Fluid chlorine can flow back into the system. This enables easier emptying of the tank.
Chlorine evaporator	Upwards	Fluid chlorine may not be permitted to flow back into the system. The water bath of the chlorine evaporator has a large heat capacity and could cause a further pressure increase.

Table 12: Aligning the expansion tank

Precondition for action:

✓ The mounting material is suitable for the wall.

Resources required:

🛠 Drill

Perform the following working steps:

1. Mark the mounting point on the wall.
2. Drill the holes for the pipe clamps.
3. Install the pipe clamps.
4. Place the expansion tank in the pipe clamps.
5. Close the pipe clamps and tighten the clamping screws

✓ **Expansion tank fitted.**

7.2.5 Connecting the expansion tank

The expansion system is connected with a flexible copper line so that a defective burst rupture disk can be replaced without dismantling the expansion tank.

Note

Breaking the flexible connection lines

The flexible connection lines are made of copper. Copper is flexible but repeated bending of the line can lead its becoming brittle. This can result in breakage of the line.

⇨ Renew any damaged (e.g. buckled) lines.

⇨ Renew the flexible connection lines after three years at the latest.

Pre-conditions for actions:

✓ The expansion tank has been fitted.

✓ The rupture disk bracket was fitted between flanges.

✓ The fitting reduction pieces were fitted on the output flange of the rupture disk unit.

✓ All sealing surfaces are free of contamination and damage.

Resources required:

🛠 Open-end spanner AF 32 and AF 13

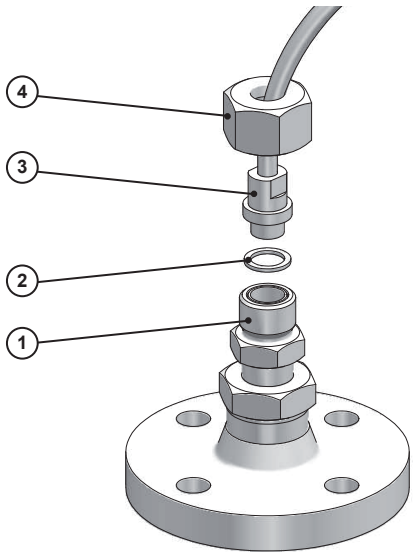

Fig. 10: Connecting the flexible line

Perform the following working steps:

1. Place a new seal (2) on the centring pin on the connection (3) of the flexible connection line. The seal is fitted in a dry state.
2. Hold the connection (3) to the threaded pin (1) and screw the union nut (4) tight by hand.

© Lutz-Jesco GmbH 2015

3. Tighten the union nut (4) with a tool and secure the connection (3) against turning. The tightening torque is approx. 40 Nm.
4. Repeat the procedure at the other end of the connection line.

✓ **Flexible connection line installed.**

> We recommend marking the flexible connection line with the date of the initial installation. This facilitates adherence to the prescribed maintenance intervals.

7.3 Connecting the contact pressure gauge

Pre-conditions for actions:

✓ The use of the signal on the operator side has been defined

✓ The pressure gauge is fitted on the rupture disk bracket.

✓ The mounting material of the distribution box is suitable for the wall.

Perform the following working steps:

1. Mount the cable distribution box to the wall. The cable screw connections must point downwards. The cable between the pressure gauge and the distribution box requires a little play to enable fitting of the rupture disk without removing the cable.
2. Select the cable screw connection to fit the cables used. Fit the cable screw connection to the cable distribution box.
3. Connect the contact pressure gauge to the foreseen signal evaluation.
   Comply with the contact rating and the switch direction (see chapter 5 „Technical data“ on page 12“).
4. Tighten the cable screw connection and connect the cable distribution box to guarantee the IP protection class of the system.

✓ **Contact pressure gauge connected.**

> Interrupt the cable connection in the cable distribution box to check the electrical systems connected. All required messages and alarm function must be activated.

7.4 Adjusting the switch point of the contact pressure gauge

The contact pressure gauge is depressurised in the system normal operating state. The pressure will only rise if the rupture disk breaks. The contact will be adjusted, e.g. to 4 bar. In this way, a broken rupture disk will be signalled once the excess pressure responsible for the fault has decreased.

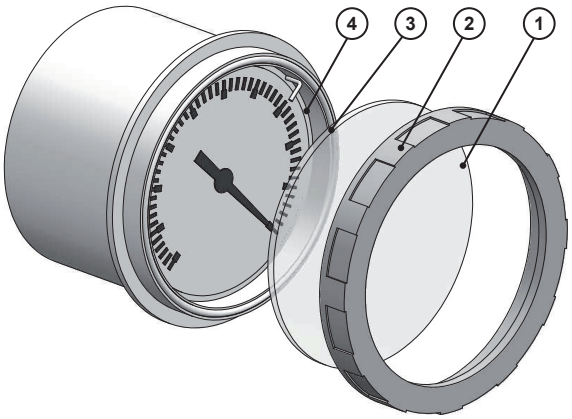

Fig. 11: Adjusting the switch point

Perform the following working steps:

1. Remove the transparent lid (2) from the contact pressure gauge. To do so, unscrew the outside ring (1) from the device. Observe the seal (3)
2. Move the red marking (4) on the desired switch point.
3. Refit the transparent lid and tighten the ring nut by hand. Ensure the correct position of the seal.

✓ **Switch point of the contact pressure gauge adjusted,**

7.5 Completing the installation

After completing installation, you must check that all the connections are leak-proof (see 8 „Start-up“ on page 21).

> All exposed bright metal surfaces must be painted as the atmosphere in chlorine gas rooms is highly corrosive. RAL1003 yellow 2-component epoxy resin paint, for example, is suitable. Paint must only be applied after a successful leak test has been completed.

© Lutz-Jesco GmbH 2015
Subject to technical changes.
150209

7.6 Installation example

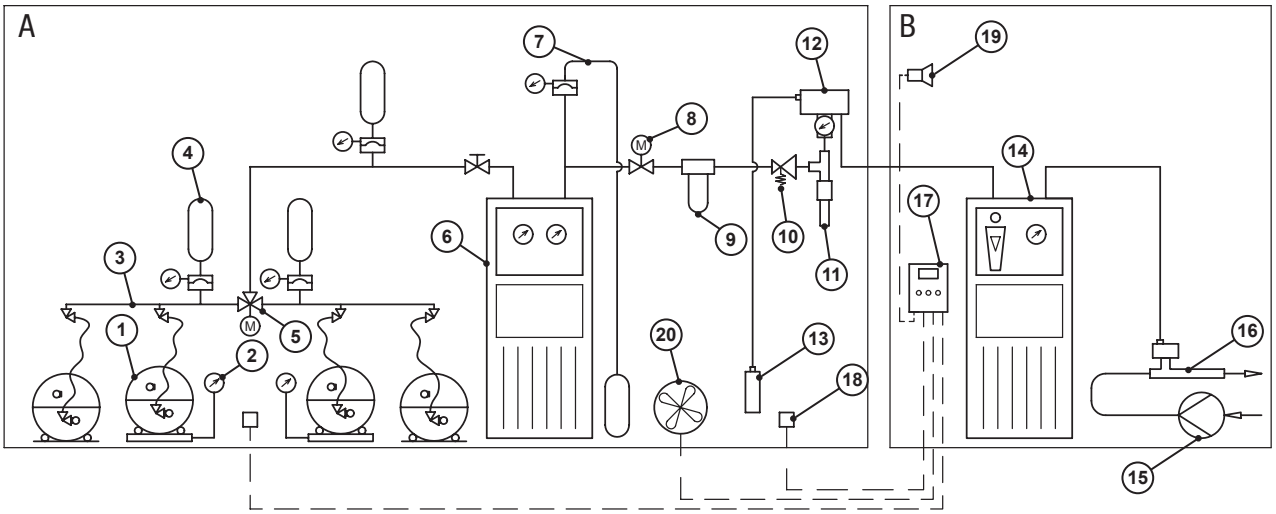

Fig. 12: Installation example

Position	Description
A	Room for the chlorine supply
B	Dosing device room
1	Chlorine barrel
2	Chlorine barrel scale
3	Pressurized manifold
4	Expansion system for piping
5	Changeover switch
6	Chlorine evaporator
7	Expansion system for chlorine evaporator
8	Automatic shutoff valve
9	Chlorine gas filter

Position	Description
10	Pressure reducing valve
11	Moisture eliminator with heating collar
12	Vacuum regulator
13	Activated carbon cartridge
14	Dosing device
15	Motive water pump
16	Injector with non-return valve
17	Gas warning device
18	Gas sensor
19	Horn
20	Entrance port of the chlorine eliminator

Table 13: Designation of components

© Lutz-Jesco GmbH 2015

8 Start-up

DANGER!

Chlorine gas can escape due to systems that are leaky or not installed correctly!

Chlorinators constitute an increased safety risk if they have not been properly installed, if an adequate leak test has not been performed or if the devices are not in good condition.

⇨ Before placing the system into operation, have it checked by technical personnel to ensure that it is in the proper condition and leaktight.

⇨ The condition of the installation must be checked for adequate tightness on a regular basis.

⇨ Get rid of leaks without delay. You must get rid of even very minor leaks without delay. Together with the humidity, chlorine forms hydrochloric acid and corrosion results in rapidly increasing leakage.

8.1 Inspecting the pressure system

Check the pressure system of the chlorine container to the vacuum regulator in two stages:

1. Leak test with nitrogen,
2. Leak test with chlorine.

8.1.1 Carrying out the leak test with nitrogen

You are strongly recommended to carry out this inspection before carrying out the leak test with chlorine, since it shows leaks in the pressure system without the risk of chlorine escaping.
As an alternative, you can carry out the inspection using dry compressed air.

Note

Destruction of the rupture disk

The test pressure could exceed the rupture pressure of the rupture disk during the leakage test with nitrogen. The rupture disk is destroyed in the process.

⇨ Fit the rupture disk only after completion of the leakage test with nitrogen.

Pre-conditions for actions:

✓ All the open connections of the pressure system were closed correctly.

✓ All the shut-off valves in the pipe system were opened.

✓ A nitrogen cylinder with a pressure reducer (0 – 25 bar) has been connected.

Resources required:

🛠 Soap solution or leak detection spray

Perform the following working steps:

1. Slowly raise the system pressure at the nitrogen cylinder's pressure reducer to 10 bar.

Should you increase the pressure further, comply with the max. permissible pressure of all components in the pressure system. In particular, observe the pressure gauges. They are to be locked or dismantled if necessary.

2. Close the nitrogen cylinder's valve.
3. Apply soap solution to all the potential leaks.
   ▶ Bubbles form at leak locations (with a possible time delay).
4. Close the outlet on the pressure reducer of the nitrogen cylinder and observe the pressure gauges in the installation.
   ▶ The pressure must not drop within one hour.
5. Repair the leak. Allow any adhesive surfaces to harden sufficiently and repeat the leak test with nitrogen.

✓ **Leak test with nitrogen carried out.**

8.1.2 Fitting the rupture disk

Precondition for action:

✓ The leak test with nitrogen has been carried out successfully.

Perform the following working steps:

1. Dismantle the rupture disk bracket from the flange connection (see Fig. 8).
2. Fit the rupture disk in the rupture disk bracket (see chapter 7.2.1 „Pre-fitting the rupture disk bracket“ on page 16). To do so, use a new O-Ring (item 5 in Fig. 6).
3. Fit the pre-fitted rupture disk bracket in the flange connection (see chapter 7.2.3 „Fitting the rupture disk bracket in the flange“ on page 17). To do so, use new flange seals (item 2+4 in Fig. 8).

✓ **Rupture disk fitted.**

© Lutz-Jesco GmbH 2015
Subject to technical changes.
150209

8.1.3 Carrying out the leak test with chlorine gas

DANGER!

Danger to life from chlorine poisoning!

If you start the leak test with chlorine gas before the entire system has been installed and the injectors are ready for operation, chlorine gas may not be extracted immediately in the event of a leak.

⇨ Make sure that all the components in the plant are installed correctly and the injectors are ready for operation before starting the leak test with chlorine gas.

⇨ Put on protective clothing before carrying out the leak test with chlorine gas.

Pre-conditions for actions:

✓ The leak test with nitrogen has been carried out successfully.

✓ The rupture disk has been fitted.

✓ All the open connections of the pressure system were closed correctly.

✓ All shutoff valves in the piping system have been closed.

✓ A chlorine tank has been closed (at the gas take-off of the chlorine tank).

✓ The injector is ready for operation.

Resources required:

🛠 Cylinder with ammonia solution

Perform the following working steps:

1. Briefly open the chlorine container valve and close it again.
2. Open the first valve in the pipe line, starting from the chlorine tank.
3. Carry out the ammonia test at the pipeline section up to the first closed valve: Hold an open bottle containing the ammonia solution close to the pipe and make slight pumping motions with the plastic bottle. Ammonia steam with chlorine forms a white vapour and makes even very small leaks visible.

Note

Damage to the plant by the ammonia solution

If the ammonia solution comes into contact with the plant, this leads to corrosion on the equipment.

⇨ Make sure that you do not spill any ammonia.

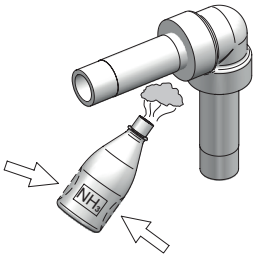

Fig. 13: Leak test with ammonia

4. Open additional downstream valves in the pipe line in sections. In each case, let a little chlorine gas into the system and close the valves again. Then carry out the ammonia test at this pipe line section and the associated fittings. Proceed in this manner until all piping and fittings have been tested for leaks.

If you find leaks:

1. Close the chlorine tank valve.
2. Use the injector to suck off the remaining chlorine.
3. Operate the chlorination installation for approx. 5 minutes with nitrogen or dry compressed air at approximately 5 bar.
4. Switch off the injector at the booster pump.
5. Repair the leak. Allow any adhesive surfaces to harden sufficiently and repeat the leak test.

If you do not find any leaks:

1. Close the chlorine tank valve.
2. Depressurise the system using the injector to evacuate the piping.
3. Switch off the injector at the booster pump.

✓ **Leak test with chlorine gas completed.**

© Lutz-Jesco GmbH 2015

9 Operation

DANGER!

Chlorine gas can escape due to systems that are leaky or not installed correctly!

Chlorinators constitute an increased safety risk if they have not been properly installed, if an adequate leak test has not been performed or if the devices are not in good condition.

- ⇨ Before placing the system into operation, have it checked by technical personnel to ensure that it is in the proper condition and leaktight.
- ⇨ The condition of the installation must be checked for adequate tightness on a regular basis.
- ⇨ Ensure that all action is taken only by personnel with sufficient and corresponding qualifications.

9.1 Normal mode

In normal operation, the expansion system does not require operation.

9.2 Shut-down with a chlorine alarm

DANGER!

Danger to life from chlorine poisoning!

Chlorine is poisonous. In severe cases, breathing in chlorine may lead to death. It irritates the eyes, the respiratory system and the skin.

- ⇨ If chlorine escapes, leave the room immediately.
- ⇨ Use sufficient personal protective equipment.
- ⇨ If chlorine gas escapes, wear a Type 2 self-contained breathing apparatus that complies with EN 137.
- ⇨ Only initiate counter measures after putting on the protective equipment.

The chlorine tank valves must be closed.

The further procedure depends on the type of accident and should be planned and executed by professional personnel.

9.3 Measures against a broken rupture disk

If the rupture disk breaks, the pressure is too high. A further pressure increase must be prevented.

- Close the chlorine gas container valves
- Evacuate the chlorine gas from the pipe line system using the injectors.

In the majority of cases, the cause of the excess pressure is to be found in incorrect operation of the valves in the pipe system with fluid chlorine. If fluid chlorine becomes trapped between two valves, thermal expansion of the fluid chlorine can result in the boundless increase of the pressure. The rupture disk will break to protect the pipes and units.

For further possible causes, see chapter 12 „Troubleshooting“ on page 29.

The measures are:

- Determine the reason for the maloperation.
- Rectify the reason for the maloperation.
- Evacuate the remaining chlorine using the injector.
- Operate the system with nitrogen for a few minutes.
- Replace the rupture disk

9.4 Inspection intervals

You must check the components of the chlorinator for leaks on a daily basis and after maintenance or commissioning work.

The position of the indicator on the pressure gauge is to be checked on a daily basis.

© Lutz-Jesco GmbH 2015
Subject to technical changes.
150209

10 Shutdown

10.1 Short-term shutdown

Perform the following working steps:

1. Close all chlorine tank valves.
2. Use the injector to suck off the remaining chlorine.
3. Switch off the injector.

✓ **Chlorinator shut down for the short term.**

10.2 Long-term shutdown

Perform the following working steps:

1. Close all chlorine tank valves.
2. Use the injector to suck off the remaining chlorine.
3. Operate the chlorination installation for approx. 5 minutes with nitrogen or dry compressed air at approximately 5 bar.
4. Close all the connections to protect the lines and devices from humidity and dirt.
5. Switch off the injector.

✓ **Chlorinator shut down for the long term.**

We recommend maintenance after a longer standstill period (see chapter 11 „Maintenance“ on page 25).

10.3 Storage

Note

Damage to the plant due to the formation of hydrochloric acid

Chlorine gas is highly hygroscopic. This means that humidity enters the system at any open connection on devices or pipes, which results in the formation of hydrochloric acid and contamination. thus inevitably causing damage to the units.

⇨ Keep all connections (including in the vacuum system and on all devices not currently in use) closed at all times.

Required actions:

✓ The device has been shut down in accordance with the section 10.2 “Long-term shutdown”.

Storing the device correctly will extend its service life. You should avoid negative influences such as extreme temperatures, high humidity, dust, chemicals, etc.

Ensure ideal storage conditions where possible:

- the storage place must be cold, dry, dust-free and generously ventilated,
- temperatures between + 2 °C and + 40 °C,
- Relative air humidity must not exceed 90 %.

10.4 Disposal of old equipment

- Before disposing of the old equipment, you must clean off the remaining chlorine by rinsing it with nitrogen or air.
- The device must be disposed of in accordance with applicable local laws and regulations. It should not be disposed of as domestic waste!

As the disposal regulations may differ from country to country, please consult your supplier if necessary.

In Germany, the manufacturer must provide free-of-charge disposal, provided the device has been safely returned along with a declaration of no objection (see page 33).

© Lutz-Jesco GmbH 2015

11 Maintenance

Products by Lutz-Jesco are manufactured to the highest quality standards and have a long service life. However, some parts are subject to operational wear. This means that regular visual inspections are necessary to ensure a long operating life. Regular maintenance will protect the device from operation interruptions.

DANGER!

Danger to life from chlorine poisoning!

Do not carry out maintenance or any other work on the chlorinator until the system has been decommissioned and there is no more chlorine gas in the lines. The failure to follow this instruction presents a significant risk of injury.

⇨ Prior to any maintenance work, prepare the system in accordance with section 11.3 „Preparing the system for maintenance“ on page 26.

WARNING

Increased risk of accidents due to insufficient qualification of personnel!

Chlorinators and their accessories must only be installed, operated and maintained by personnel with sufficient qualifications. Insufficient qualification will increase the risk of accidents.

⇨ Ensure that all action is taken only by personnel with sufficient and corresponding qualifications.

Note

Damage to the system due to corrosion

Water in chlorine carrying system components combines with chlorine to form hydrochloric acid and leads to corrosion

⇨ After maintenance work is complete, remove all water residues from the system before placing it into operation.

⇨ Keep the connection of the contact vacuum meter closed so that humidity cannot penetrate

11.1 Maintenance intervals

To avoid hazardous incidents, chlorinators must be regularly maintained. This table gives you an overview of maintenance work and the intervals at which you must carry it out.

Interval	Maintenance
After 1 year	Minor maintenance: ■ Clean the device. ■ Replace the seals
After 3 years	Major maintenance: ■ Clean the device. ■ Replace the seals ■ Replace the flexible connection cable
After 5 years	■ Replace contact pressure gauge
After the rupture disk breaks	■ Clean the device. ■ Replace the rupture disk. ■ Replace the seals

Table 14: Maintenance intervals

In some cases, regional regulations may require shorter maintenance intervals. Maintenance intervals depend only on how frequently the equipment is used. Chemical wear of rubber parts, for example, begins with the initial medium contact and continues irrespective of the usage.

© Lutz-Jesco GmbH 2015
Subject to technical changes.
150209

11.2 Maintenance accessories

Description	Part number
Silicone grease, medium viscosity 35 g for application to seals	35537
Plastic tool for dismantling O-rings	W00133
Liquid sealant 50 ml For bonding threads	97715
Ammonia solution 50 ml for the leak test	13514
PTFE strip for sealing the pressure gauge.	1083

Table 15: Maintenance accessories

11.3 Preparing the system for maintenance

DANGER!

Danger to life from chlorine poisoning!

Do not carry out maintenance or any other work on the chlorinator until the system has been decommissioned and there is no more chlorine gas in the lines. The failure to follow this instruction presents a significant risk of injury.

⇨ Proceed in accordance with the following instructions.

Perform the following working steps:

1. Close the chlorine tank valves.
2. Use the injector to suck off the remaining chlorine.
3. Run the chlorinator for approximately five minutes with nitrogen or dry compressed air.
4. Switch off the injector.
5. Close all the connections to protect the lines and devices from humidity and dirt.

✓ **The system is prepared for maintenance.**

Note

Icing of the expansion tank

If the expansion tank contains fluid chlorine and the tank is fitted with the opening pointing upwards, the fluid chlorine in the tank must evaporate. This requires a great deal of energy; the expansion tank will ices up from outside.

⇨ Evacuate the residual chlorine until no further icing can be observed. Only then should you evacuate the rest of the chlorine. This can take a number of hours.

⇨ The expansion tank may be heated carefully to a temperature of max. 50°C e.g. with a cloth soaked in warm water.

⇨ If you install an electrical heater on the tank, observe the following:
- The heating may only be switched on when required
- The max. temperature is 50°C

⇨ Never heat the tank with a flame.

11.4 Maintenance of the components

Precondition for action:

✓ The system has been prepared for maintenance in accordance with section 11.3 “Preparing the system for maintenance”.

11.4.1 Rupture disk and contact pressure gauge

The rupture disk has a long durability and need only be changed when necessary. The rupture disk is inspected and cleaned during maintenance.

Note

Damage of the rupture disk

Rupture disks are domed iron discs with a high precision. The rupture pressure is determined by the dome and the precisely produced notches. Even a slight bend to the rupture disk alters the rupture pressure.

⇨ Treat the rupture disk with care.

⇨ Handle the rupture disk on the mounting edge.

⇨ Do not use force or any sharp tools to clean the rupture disk.

Perform the following working steps:

1. Dismantle the rupture disk bracket from the flange (see Fig. 8).
2. Loosen the screws on the rupture disk bracket and remove the rupture disk (see fig. 6).
3. Remove the flat gasket and the O-ring. Use a plastic tool to do so, so as not to damage the sealing surface.
4. Clean the rupture disk and the rupture disk bracket. Warm water or isopropyl alcohol is suitable for this purpose.

© Lutz-Jesco GmbH 2015

5. Inspect the rupture disk. Pay particular attention to scratching on the mounting edge (1) and damage to or corrosion of the domed surface (2). Replace rupture disks in a questionable state.

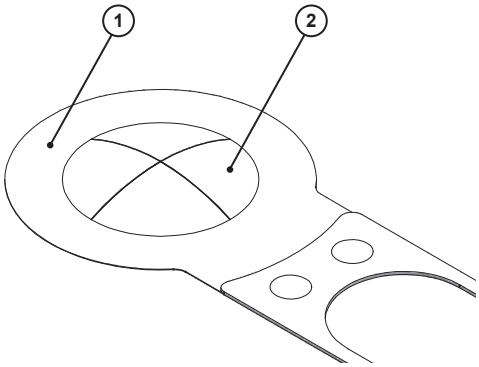

Fig. 14: Inspecting the rupture disk

6. Inspect the rupture disk bracket. Look for scratches on the sealing surface.
7. Allow all components to dry well.
8. Fit the rupture disk bracket with a new seal. See chapter 7.2 „Installing the device“ on page 16.

✓ **Rupture disk and contact pressure gauge serviced.**

11.4.2 Pressure gauge

The pressure gauges must be replaced regularly (see chapter 11.1 „Maintenance intervals“ on page 25). If the rupture disk is not broken, the pressure gauge is not contaminated with chlorine. In this case, cleaning is unnecessary and the use time of the pressure gauge can be doubled.

Note

Damage to pressure gauges

Pressure gauges are measurement devices which are adjusted by specialists when manufactured. Pressure gauges that have been disassembled must be tested and readjusted by the manufacturer.

⇨ Do not dismantle pressure gauges.

pressure gauges are highly complicated which cannot be emptied entirely.

⇨ Do not allow any soiling to enter the pressure gauge.

⇨ Do not allow any water to enter the pressure gauge.

Resources required:

- PTFE strip
- Cotton swabs

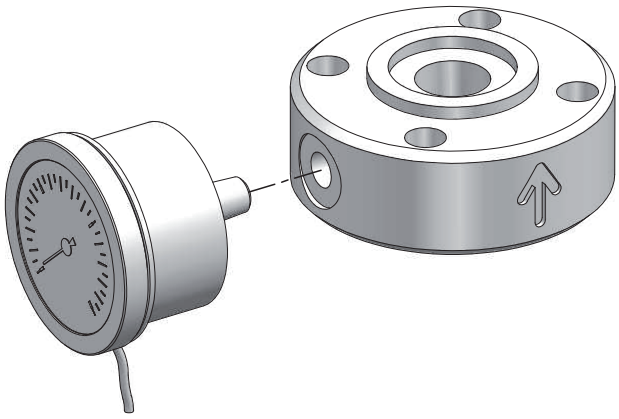

Fig. 15: Dismantling a pressure gauge

Perform the following working steps:

1. Disconnect the pressure gauge cable.
2. Unscrew the pressure gauge from the upper section of the rupture disk bracket. Remove the PTFE strip from the thread.
3. Check the input of the pressure gauge for contamination. Remove the contamination with isopropyl alcohol. At the same time, hold the pressure gauge with the connection facing downwards so that soiling cannot fall into the device. Do not use a pointed tool, so that the protective film on the plate spring is not destroyed.
4. If the pressure gauge is not immediately reconnected, seal the connection airtight.
5. Fit the pressure gauge with approx. 5 long PTFE strips.
6. Reconnect the pressure gauge cable.

✓ **Pressure gauge cleaned.**

11.4.3 Flexible connection line

The flexible connection lines must be replaced regularly (see chapter 11.1 „Maintenance intervals“ on page 25). If the rupture disk is not broken, the line is not contaminated with chlorine. This doubles the use period of the flexible connection line.

Perform the following working steps:

1. Loosen the union nut connections on both sides of the flexible connection line.
2. Remove the connection sealings.
3. Clean the sealing surfaces if necessary.
4. Connect the flexible connection line with the new seals (see chapter 7.2.5 „Connecting the expansion tank“ on page 18).

✓ **Connection seals changed.**

© Lutz-Jesco GmbH 2015
Subject to technical changes.
150209

11.4.4 Expansion tank

The expansion tank does not require maintenance.

11.5 Finishing maintenance

Perform the following working steps:

1. Make a note of the date and scope of the maintenance performed.
2. Attach a sticker displaying the maintenance date to the device.
3. Repair the paint damage on the device.

✓ **Maintenance completed.**

> All exposed bright metal surfaces must be painted as the atmosphere in chlorine gas rooms is highly corrosive. RAL1003 yellow 2-component epoxy resin paint, for example, is suitable. Paint must only be applied after a successful leak test has been completed.

To restart the system, proceed in accordance with the instructions in section 8 „Start-up“ on page 21.

© Lutz-Jesco GmbH 2015

12 Troubleshooting

See below for information about how to rectify faults on the device or the system. If you cannot eliminate the fault, please consult with the manufacturer on further measures or return the device for repair.

Problem	Possible cause	Remedy
The rupture disk is broken, the pressure gauge displays a pressure above 0 bar.	The pressure in the system was too high because...	
	… fluid chlorine was trapped between two closed valves. If cold fluid chlorine assumes its ambient temperature, it generates a very high pressure. This is usually caused by maloperation.	■ The remaining chlorine was evacuated with the injector. ■ Determine the exact cause ■ Train personnel if necessary ■ If necessary, correct the structure of the system or the control logic. ■ Replace the rupture disk.
	… the test pressure at the leakage test with nitrogen lay above the rupture pressure of the rupture disk.	■ Fit the rupture disk in the rupture disc bracket only after the leakage test with nitrogen. ■ Reduce the test pressure. ■ Replace the rupture disk.
	… the chlorine drums are too warm and the steam pressure of the chlorine lies above the rupture pressure. The sun may be shining on the chlorine drums.	■ Cool the chlorine drums. ■ Evacuate the chlorine using the injector. ■ Ensure that the temperature of the chlorine drums cannot rise above 50°C e.g. install sun protection. ■ Replace the rupture disk.
The rupture disk is broken, but the pressure does not fall to a normal value.	Higher chlorine pressure thanks to very warm chlorine drums	■ See above
	The expansion tank is too small.	■ Check whether the expansion tank holds 20% of the volume of the device pipe line. ■ If necessary, fit a larger expansion tank. ■ Replace the rupture disk.
The rupture disk is already broken at very low pressure	The rupture disk was fitted back-to-front.	■ Replace the rupture disk and ensure it is aligned correctly. The dome of the rupture disk and the arrow point to the pressureless side.
Leakage of the rupture disk	The rupture disk was fitted without an O-ring.	■ Fit the O-ring.
	The sealing surfaces on the rupture disk or the rupture disk bracket are damaged.	■ Inspect the sealing surfaces ■ Replace the defective parts
The rupture disk is broken but the signal units have not been triggered.	The contact on the pressure gauge is adjusted incorrectly.	■ Adjust the contact to approx. 4 bar.
	The pressure gauge is worn.	■ Replace the pressure gauge.
	The signal is processed incorrectly by the connected units.	■ Check the evaluation units.

Table 16: Troubleshooting

© Lutz-Jesco GmbH 2015
Subject to technical changes.
150209

13 Spare parts

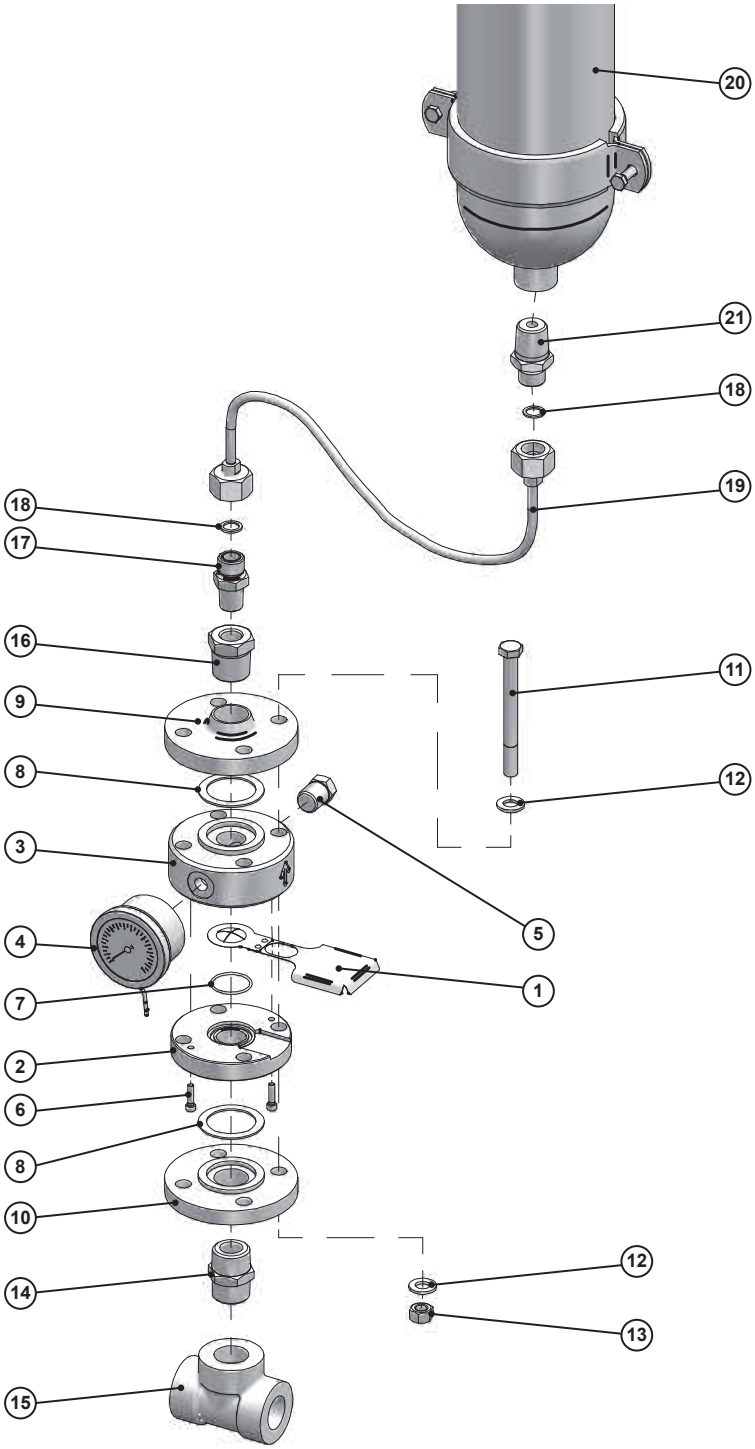

Fig. 16: Expansion system - spare parts

© Lutz-Jesco GmbH 2015

Item	No.	Description	Info	Part number
1	1	Rupture disk	22.5 bar	23900002
2	1	Lower section for the rupture disk bracket		40857
3	1	Upper section for the rupture disk bracket		40858
4	1	Contact pressure gauge	40 bar, ¼“ NPT	24000026
5	1	Threaded plug	½“ NPT	39699
6	2	Cylinder head screw	M5x20	83268
7 *	1	O-ring	FPM, Ø32	80929
8 *	2	Flat gasket for the flange	Ø57/43	81421
9	1	Threaded connection with tongue	Flange DN25/PN40	15928
10	1	Threaded flange with groove	Flange DN25/PN40	15927
11 *	4	Hexagonal bolt	M12x120	85027
12 *	8	washer	Ø13	84136
13 *	4	Union nut	M12	83128
14	1	Double nipple	1" NPT	88800
15	1	T-piece	1" NPT	88328
16	1	Reduction	1“ NPT – ½“ NPT	40862
17	1	Reduction	½“ NPT – G 5/8	40859
18 *	2	Flat gasket for connection G 5/8	Ø19/14	81832
19	1	Flexible connection line	L = 2m	88566
			L = 6m	88825
20	1	Expansion tank Including item 21	10 dm³	22100065
			20 dm³	22100066
21	1	Reduction	W28.8 – G 5/8	40884

Table 17: Individual parts for expansion systems

13.1 Maintenance sets

Part	Content	Part number
Small maintenance set	■ All seals ■ All screws	40886
Large maintenance set	■ Small maintenance set ■ 2m flexible connection cable	41141
	■ Small maintenance set ■ 6m flexible connection cable	41142

Table 18: Seal for flanges

© Lutz-Jesco GmbH 2015
Subject to technical changes.
150209

14 Notes to EC conformity

The components of this device fall under the purview of a number of directives. The CE declaration of conformity of the components applies.

Rupture disk

The device is subject to an individual acceptance test. The CE declaration of conformity is issued on an individual basis and is not part of the general operating manual.

Expansion tank

The device is subject to an individual acceptance test. The CE declaration of conformity is issued on an individual basis and is not part of the general operating manual.

Flexible connection line

The device falls under the purview of the pressure equipment directive 97/23/EG. The specifications do not exceed the limit values in accordance with article 3, paragraph 1. Therefore, it is designed and manufactured in accordance with valid good engineering practice This pressure device may not carry a CE marking and an EC declaration of conformity will not be issued.

Contact pressure gauge

The device falls under the purview of the pressure equipment directive 97/23/EG. The specifications do not exceed the limit values in accordance with article 3, paragraph 1. Therefore, it is designed and manufactured in accordance with valid good engineering practice This pressure device may not carry a CE marking and an EC declaration of conformity will not be issued.

© Lutz-Jesco GmbH 2015

15 Declaration of no objection

Please copy the declaration, stick it to the outside of the packaging and return it with the device.

Declaration of no objection

Please fill out a separate form for each appliance!

We forward the following device for repairs:

Device and device type: ..... Part-no.: .....

Order No.: ..... Date of delivery: .....

Reason for repair: .....

.....

.....

Dosing medium

Description: ..... Irritating: ☐ Yes ☐ No

Properties: ..... Corrosive: ☐ Yes ☐ No

We hereby certify, that the product has been cleaned thoroughly inside and outside before returning, that it is free from hazardous material (i.e. chemical, biological, toxic, flammable, and radioactive material) and that the lubricant has been drained.

If the manufacturer finds it necessary to carry out further cleaning work, we accept the charge will be made to us.

We assure that the aforementioned information is correct and complete and that the unit is dispatched according to the legal requirements.

Company / address: ..... Phone: .....

..... Fax: .....

..... Email: .....

Customer No.: ..... Contact person: .....

Date, Signature: .....

© Lutz-Jesco GmbH 2015
Subject to technical changes.
150209

16 Warranty claim

Warranty Application

Please copy and send it back with the unit!

If the device breaks down within the period of warranty, please return it in a cleaned condition with the complete warranty application, filled out.

Sender

Company: ..... Phone: ..... Date: .....

Address: .....

Contact person: .....

Manufacturer order no.: ..... Date of delivery: .....

Device type: ..... Serial number: .....

Nominal capacity / nominal pressure: .....

Description of fault: .....

.....

.....

.....

.....

.....

.....

.....

Service conditions of the device

Point of use / system designation: .....

.....

.....

Accessories used (suction line etc.): .....

.....

.....

.....

.....

Commissioning (date): .....

Duty period (approx. operating hours): .....

Please describe the specific installation and enclose a simple drawing or picture of the chemical feed system, showing materials of construction, diameters, lengths and heights of suction and discharge lines.

© Lutz-Jesco GmbH 2015

Index

A
Assembling the flange connection 16
Assembly
  Flange connection 16
  Manifold 16

C
Commissioning 21

D
Declaration of no objection 33
Device maintenance 26
Device revision 9
Dimensioned drawings 13
Dimensions 13
Disposal of old equipment 24
Dosing media
  Prohibited dosing media 9

E
EC conformity 31

F
Finishing maintenance 28
Function description 10

G
General warnings 6

H
Handling instructions
  Marking 5
Hazards due to non-compliance with the safety instructions 7

I
Information about chlorine 6
Inspecting the pressure system 21
Installation 15
Installing the device 16
Intended purpose 9
Intended use 9

L
Leak test
  Chlorine gas 22
  Nitrogen 21
Long-term shutdown 24

M
Maintenance 25
  Accessories 26
  Finishing 28
  Maintenance intervals 25
  Preparing 26
Maintenance accessories 26

N
Notes for the Reader 4
Notes to EC conformity 31

O
Operation 23

P
Personal protective equipment 7
Personnel qualification 7
Personnel tasks 8
Prepare system for maintenance 26
Product description 10
Product warranty 9
Prohibited dosing media 9

R
Rating plate 11

S
Safety 6
Scope of delivery 10
Short-term shutdown 24
Shutdown 24
Shutting down in an emergency 23
Signal words
  Explanation 4
Spare parts 30
Specialist staff 7
Storage 24
Structure of the device 10

T
Technical data 12
Test intervals 23
Trained persons 7
Troubleshooting 29

W
Warnings
  General warnings 6
  Marking 4
Warning sign
  Explanation 4
Warranty claim 34
Working in a safety-conscious manner 7

© Lutz-Jesco GmbH 2015
Subject to technical changes.
150209