Flow sight glass

Operating instructions

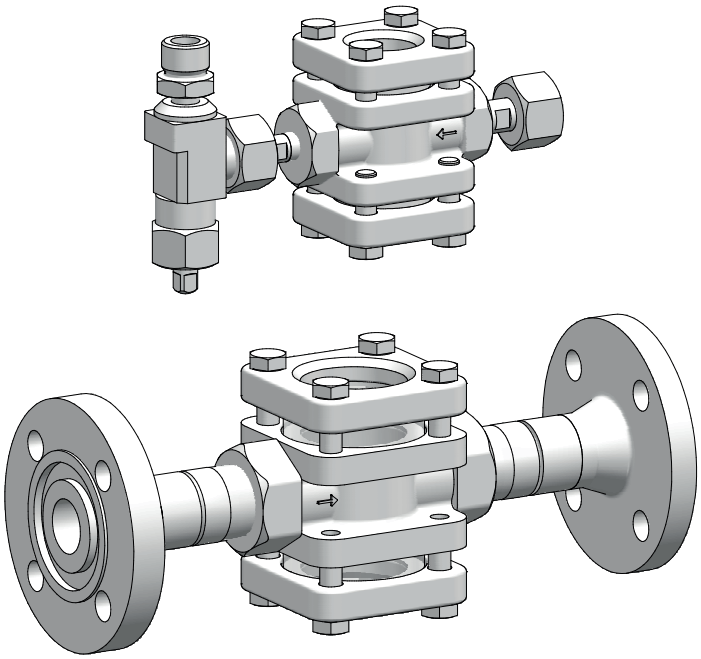

Read the operating manual!

The user is responsible for installation and operation related mistakes!

© Lutz-Jesco GmbH 2021

Dosing Conveying Control | Liquids Gases Systems

Table of Contents

1 Notes for the Reader 4
1.1 General non-discrimination 4
1.2 Explanation of the signal words 4
1.3 Explanation of the warning signs 4
1.4 Identification of warnings 4
1.5 Identification of action instructions 4

2 Safety 5
2.1 General warnings 5
2.2 Information about chlorine 5
2.3 Hazards due to non-compliance with the safety instructions 5
2.4 Working in a safety-conscious manner 6
2.5 Personal protective equipment 6
2.6 Personnel qualification 6
2.7 Personnel tasks 6

3 Intended use 7
3.1 Notes on product warranty 7
3.2 Intended purpose 7
3.3 Prohibited operating conditions 7

4 Product description 8
4.1 Scope of delivery 8
4.2 Design 8
4.3 Rating plate 8

5 Technical data 9

6 Dimensions 10
6.1 Flow sight glass with auxiliary valve 10
6.2 Flow sight glass with flanges 11

7 Installation 12
7.1 Mounting position 12
7.2 Installing the device 12
7.3 Completing the installation 13

8 Commissioning 14
8.1 Leak test of device with auxiliary valve 14
8.2 Leak test of device with flanges 15

9 Operation 17
9.1 Shutting down in an emergency 17
9.2 Test intervals 17

10 Shutdown 17
10.1 Short-term shutdown 17
10.2 Long-term shutdown 17
10.3 Storage 17
10.4 Disposal of old equipment 17

11 Maintenance 18
11.1 Maintenance intervals 18
11.2 Preparing the system for maintenance 18
11.3 Device maintenance 18
11.4 Finishing maintenance 19

12 Troubleshooting 19

13 Information about EU conformity 19

14 Declaration of no objection 20

15 Warranty claim 21

16 Index 22

© Lutz-Jesco GmbH 2021
Subject to technical changes.
211101

1 Notes for the Reader

This operating manual contains information and behaviour rules for the safe and designated operation of the device.

Observe the following principles:

- read the entire operating instructions prior to inaugurating the device.
- Ensure that everyone who works with or on the device has read the operating manual and follows it.
- Maintain the operating manual throughout the service life of the device.
- Pass the operating manual on to any subsequent owner of the device.

1.1 General non-discrimination

This operating manual uses only the masculine gender in cases in which the rules of grammar would allow for gender allocation. This approach serves the purpose of legibility. Men and women are always addressed equally.

1.2 Explanation of the signal words

Different signal words in combination with warning signs are used in this operating manual. Signal words illustrate the gravity of possible injuries if the risk is ignored:

Signal word	Meaning
DANGER	Refers to imminent danger. Ignoring this sign may lead to death or the most serious injuries.
WARNING	Refers to a potentially hazardous situation. Failure to follow this instruction may lead to death or severe injuries.
CAUTION	Refers to a potentially hazardous situation. Failure to follow this instruction may lead to minor injury or damage to property.
PLEASE NOTE	Refers to a danger which, if ignored, may lead to risk to the machine and its function.

Tab. 1: Explanation of the signal words

1.3 Explanation of the warning signs

Warning signs represent the type and source of a danger:

Warning sign	Type of danger
	Danger to life from chlorine poisoning
	General danger zone
	Danger of damage to machine or functional influences

Tab. 2: Explanation of the warning signs

1.4 Identification of warnings

Warnings are intended to help you recognise risks and avoid negative consequences.

This is how warnings are identified:

Warning sign	**SIGNAL WORD**
Description of danger. Consequences if ignored. ⇨ The arrow signals a safety precaution to be taken to eliminate the danger.	

1.5 Identification of action instructions

This is how pre-conditions for action are identified:

✓ Pre-condition for action which must be met before taking action.

🛠 A resource such as a tool or auxiliary materials required to perform the operating instructions.

This is how instructions for action are identified:

➔ Separate step with no follow-up action.

1. First step in a series of steps.
2. Second step in a series of steps.

▸ Result of the above action.

✓ **Action completed, aim achieved.**

© Lutz-Jesco GmbH 2021

2 Safety

2.1 General warnings

The following warnings are intended to help you eliminate the dangers that can arise while handling the device. Risk prevention measures always apply regardless of any specific action.

Safety instructions warning against risks arising from specific activities or situations can be found in the respective sub-chapters.

DANGER

Danger to life from chlorine poisoning!

Chlorine is poisonous. In severe cases, breathing in chlorine may lead to death. It irritates the eyes, the respiratory system and the skin.

- ⇨ Use sufficient personal protective equipment.
- ⇨ When carrying out any work on the system, use a respirator mask with a Type B gas filter that complies with EN 14387.
- ⇨ Always comply with the accident prevention regulations that apply at the place of use.
- ⇨ Get rid of leaks without delay. You must get rid of even very minor leaks without delay. Together with the humidity, chlorine forms hydrochloric acid and corrosion results in rapidly increasing leakage.
- ⇨ Use only chlorine-resistant seals.
- ⇨ Only use seals once. Reusing them leads to leaks.

DANGER

Danger to life from chlorine poisoning!

Chlorinators without gas warning devices are an increased safety risk, since it is not possible to detect escaping chlorine gas in good time or at all.

- ⇨ Install a gas warning device.

WARNING

Increased risk of accidents due to insufficient qualification of personnel!

Chlorinators and their accessories must only be installed, operated and maintained by personnel with sufficient qualifications. Insufficient qualification will increase the risk of accidents.

- ⇨ Ensure that all action is taken only by personnel with sufficient and corresponding qualifications.
- ⇨ Prevent access to the system for unauthorised persons.

PLEASE NOTE

Damage to the plant due to the formation of hydrochloric acid

Chlorine gas is highly hygroscopic. This means that humidity enters the system at any open connection on devices or pipes, which results in the formation of hydrochloric acid and contamination. thus inevitably causing damage to the units.

- ⇨ Keep all connections (including in the vacuum system and on all devices not currently in use) closed at all times.

2.2 Information about chlorine

Chlorine is a hazardous substance. The chemical element chlorine is a greenish-yellow, toxic gas with a pungent odour, which can be detected in the air at concentrations below 1 ppm (= 1 ml/m³).

Chlorine is 2.5 times heavier than air and accumulates at ground level.

Chlorine is extremely toxic for water organisms. The reason for the toxicity of chlorine is its extraordinary reactivity. It reacts with animal and vegetable tissue and thus destroys it.

Air with a chlorine gas content of 0.5 – 1 % leads to a quick death in mammals and humans, as it attacks the respiratory tract and the pulmonary alveolus (formation of hydrogen chloride or hydrochloride acid).

PLEASE NOTE

Faults due to insufficient chlorine quality

Impurities in the chlorine gas form deposits in devices and valves and can attack the components chemically. This can lead to malfunctions.

- ⇨ Only use technically pure chlorine that meets the following requirements:
  - Mass content of chlorine at least 99.5 %
  - Water content max. 20 mg/kg

  Chlorine that complies with EN 937 meets these requirements

2.3 Hazards due to non-compliance with the safety instructions

Failure to follow the safety instructions may endanger not only persons, but also the environment and the device.

The specific consequences can be:

- Failure of important functions of the device and of the corresponding system
- Failure of required maintenance and repair methods
- Danger to persons
- Danger to the environment caused by substances leaking from the system

© Lutz-Jesco GmbH 2021
Subject to technical changes.
211101

2.4 Working in a safety-conscious manner

Besides the safety instructions specified in this operating manual, further safety rules apply and must be followed:

- Accident prevention regulations
- Safety and operating provisions
- Safety regulations on handling hazardous substances
- Environmental protection provisions
- Applicable standards and legislation

2.5 Personal protective equipment

Based on the degree of risk posed by the dosing medium and the type of work you are carrying out, you must use corresponding protective equipment. Read the Accident Prevention Regulations and the Safety Data Sheets to the dosing media find out what protective equipment you need.

As a minimum, the following protective equipment is recommended:

Protective mask

protective clothing

Protective gloves

safety shoes

Corresponding protective equipment must be used during these tasks:

- Commissioning
- All work on gas-bearing sections of the plant
- Changing the chlorine gas containers
- Shut-down
- Maintenance work
- Disposal

DANGER

Danger to life from chlorine poisoning!

If chlorine gas escapes, a filter mask is ineffective, since it is not a self-contained breathing apparatus.

⇨ If chlorine gas escapes, wear a Type 2 self-contained breathing apparatus that complies with EN 137.

2.6 Personnel qualification

Any personnel who work on the device must have appropriate special knowledge and skills.

Anybody who works on the device should meet the conditions below:

- Attendance at all the training courses offered by the owner
- Personal suitability for the respective activity
- Sufficient qualification for the respective activity
- Training in how to handle the device
- Knowledge of safety equipment and the way this equipment functions
- Knowledge of this operating manual, particularly of safety instructions and sections relevant for the activity
- Knowledge of fundamental regulations regarding health and safety and accident prevention

All persons must generally have the following minimum qualification:

- Training as specialists to carry out work on the device unsupervised
- Sufficient training that they can work on the device under the supervision and guidance of a trained specialist

These operating instructions differentiate between these user groups:

2.6.1 Specialist staff

Thanks to their professional training, knowledge, experience and knowledge of the relevant specifications, specialist staff are able to perform the job allocated to them and recognise and/or eliminate any possible dangers by themselves.

2.6.2 Trained persons

Trained persons have received training from the operator about the tasks they are to perform and about the dangers stemming from improper behaviour.

Trained persons have attended all trainings offered by the operator.

2.7 Personnel tasks

In the table below you can check what qualifications are the pre-condition for the respective tasks. Only people with appropriate qualifications are allowed to perform these tasks!

Qualification	Activities
Specialist staff	■ Transportation ■ Assembly ■ Commissioning ■ Control ■ Replace the chlorine tank ■ Taking out of operation ■ Fault rectification ■ Maintenance ■ Repairs ■ Disposal
Trained persons	■ Storage

Tab. 3: Personnel qualification

© Lutz-Jesco GmbH 2021

3 Intended use

3.1 Notes on product warranty

Any non-designated use of the device can impair its function and the protection provided. This leads to invalidation of any warranty claims!

Please note that liability is on the side of the user in the following cases:

- The product is operated in a manner that is not consistent with these operating instructions, in particular with the safety instructions, handling instructions and intended purpose.
- if people operate the product who are not adequately qualified to carry out their respective activities.
- no original spare parts or accessories of Lutz-Jesco GmbH are used.
- Unauthorised changes are made to the product by the user.
- The user uses different dosing media than those indicated in the order.

3.2 Intended purpose

The inspection glass is a fitting intended solely for installation in a piping system to enable local observation of the medium flow. Two glass panes made of special glass are installed in the housing to this end.

3.3 Prohibited operating conditions

- The product is only intended for the applications according to Section 3.2 "Intended purpose".
- The details regarding the operating conditions according to chapter 5 „Technical data“ on page 9 must be observed.
- The product was installed in the opposite direction to the arrow.
- The product must not be operated if protective equipment has been removed or has not been properly installed or is not fully functional.

© Lutz-Jesco GmbH 2021
Subject to technical changes.
211101

4 Product description

4.1 Scope of delivery

Please compare the delivery note with the scope of delivery. The scope of delivery includes:

- Flow sight glass
- Assembly accessories for flanges DN25/PN40 (optional)
- Operating instructions

4.2 Design

There are two versions available: In the first version (Fig. 1 „Flow sight glass with auxiliary valve“ on page 8) the device has a connection with a union nut on the input side side to enable the connection to a chlorine tank via an auxiliary valve. An auxiliary valve is pre-mounted on the output side of the device to permit direct connection of a flexible connection line.

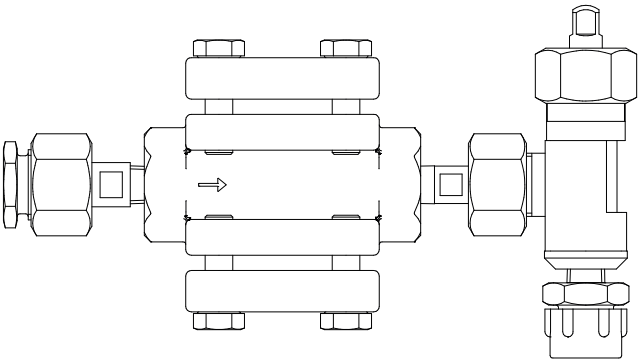

Fig. 1: Flow sight glass with auxiliary valve

The second version (Fig. 2 „Flow sight glass with flanges“ on page 8) of the device has flange connections fitted on the input and output side for installation in a pipe line.

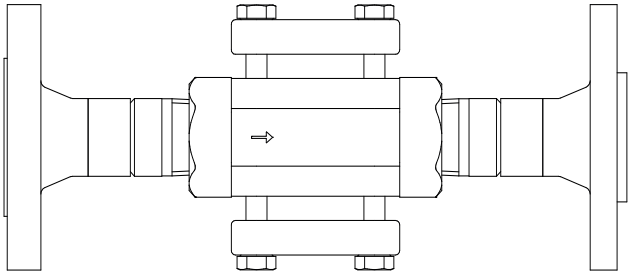

Fig. 2: Flow sight glass with flanges

4.3 Rating plate

The device does not have a rating plate. Instead, the following details have been punched into its metal body:

- Material number of the housing body
- Specification of the special glass type
- Designation of the series
- Maximum permissible pressure
- Nominal width of the housing body

© Lutz-Jesco GmbH 2021

5 Technical data

Description				Value
Connections	Version with auxiliary valve	Input		Union nut
		Output		Threaded pin
	Version with flanges	Input		Grooved flange EN 1092-1/11D/DN25 PN40
		Output		Tongue flange EN 1092-1/11C/DN25 PN40
Materials	Sight glass	Housing		1.0619
		Cover		1.0619
		Glass		Borosilicate DIN 7080
		Seals		100 % PTFE
	Auxiliary valve	Housing		Aluminium ronze
		Spindle		Monel
		Gland		PTFE
Weight	with auxiliary valve		kg	3 approx.
	with flanges		kg	7 approx.
Max. temperature			°C	50
Max. pressure			bar	40

Tab. 4: Technical data

© Lutz-Jesco GmbH 2021
Subject to technical changes.
211101

6 Dimensions

All dimensions in mm

6.1 Flow sight glass with auxiliary valve

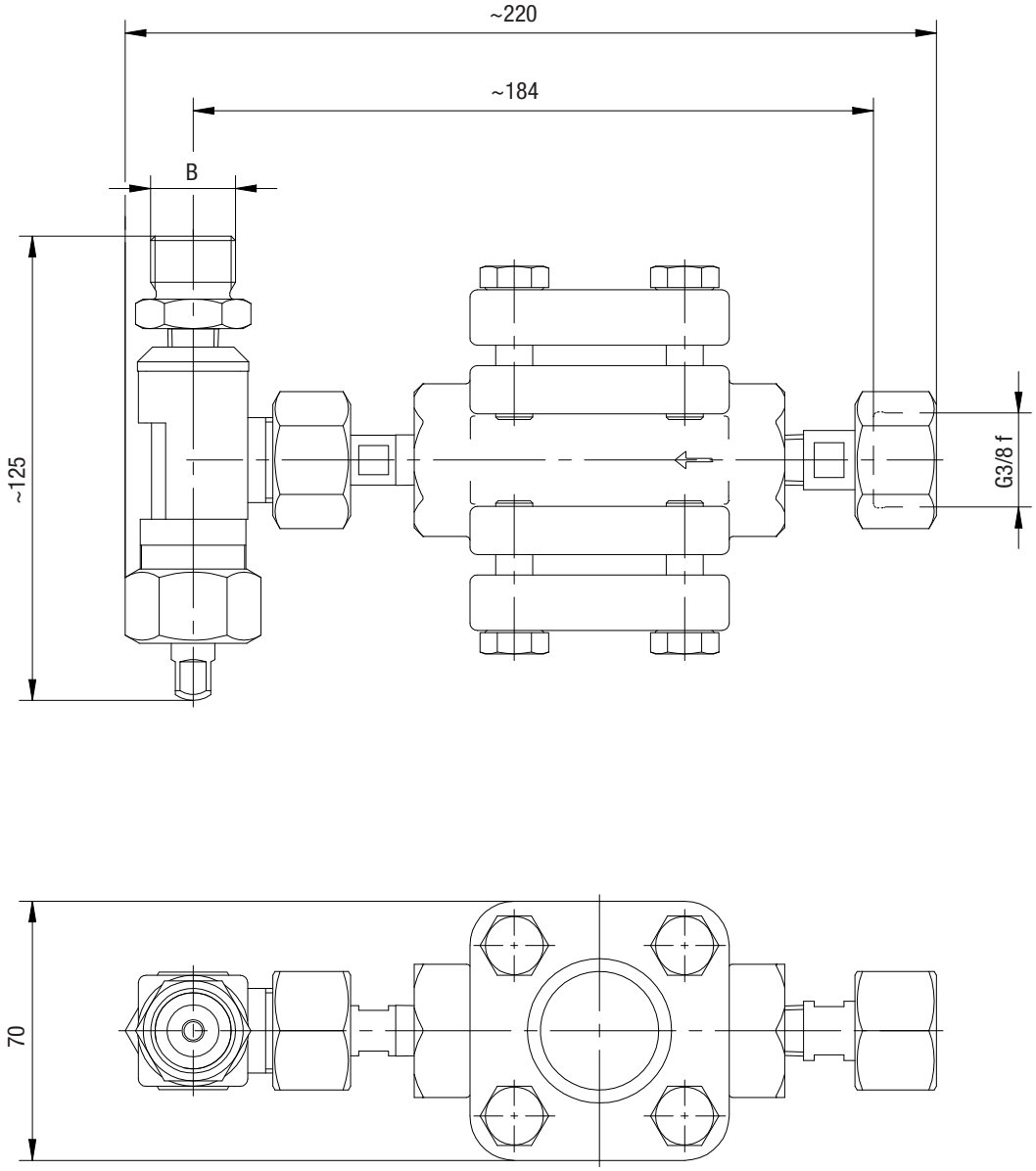

Fig. 3: Dimensional drawing flow sight glass with auxiliary valve

B
G3/4 male
G5/8 male
1.030"-14NGO male
BSW 1" male

Fig. 4: Dimensions B

© Lutz-Jesco GmbH 2021

6.2 Flow sight glass with flanges

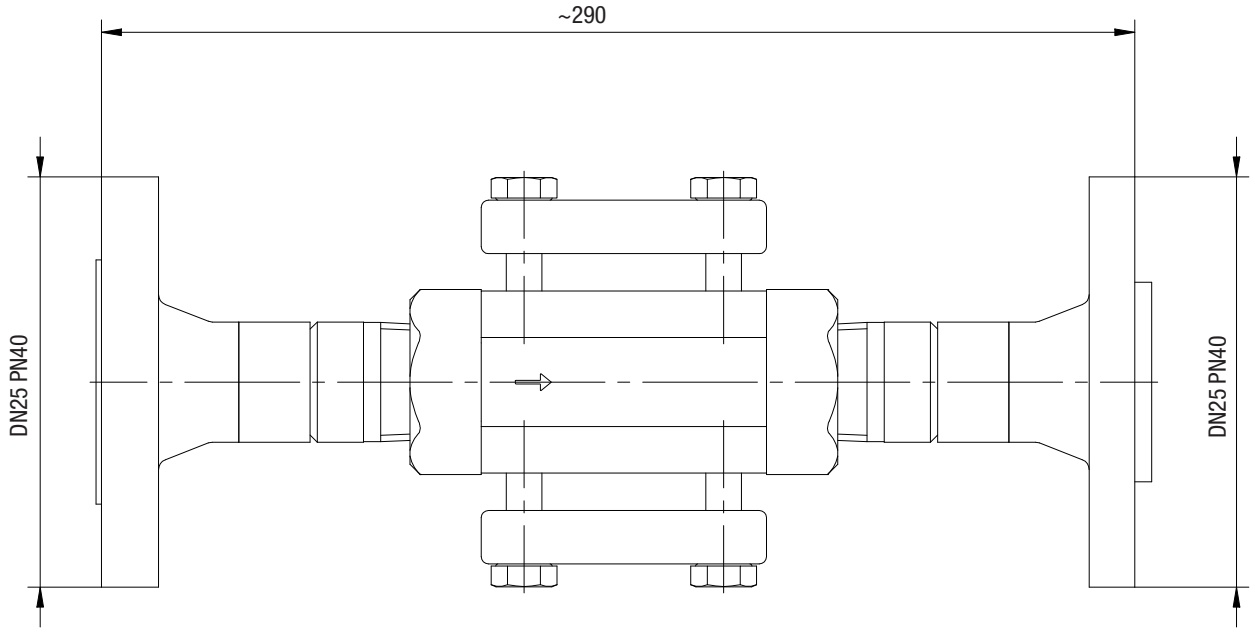

Fig. 5: Dimensional drawing flow sight glass with flanges

7 Installation

WARNING

Increased risk of accidents due to insufficient qualification of personnel!

Chlorinators and their accessories must only be installed, operated and maintained by personnel with sufficient qualifications. Insufficient qualification will increase the risk of accidents.

⇨ Ensure that all action is taken only by personnel with sufficient and corresponding qualifications.

⇨ Prevent access to the system for unauthorised persons.

PLEASE NOTE

Damage to the system due to incorrect installation

The failure to observe installation instructions (e.g. use of unsuitable tools, incorrect torque) can damage the system parts.

⇨ Use suitable tools.

⇨ Note the specified torque.

7.1 Mounting position

The device can be fitted horizontally or vertically. Note the flow direction. This is indicated by an arrow on the inspection glass housing.

7.2 Installing the device

7.2.1 Device with auxiliary valve

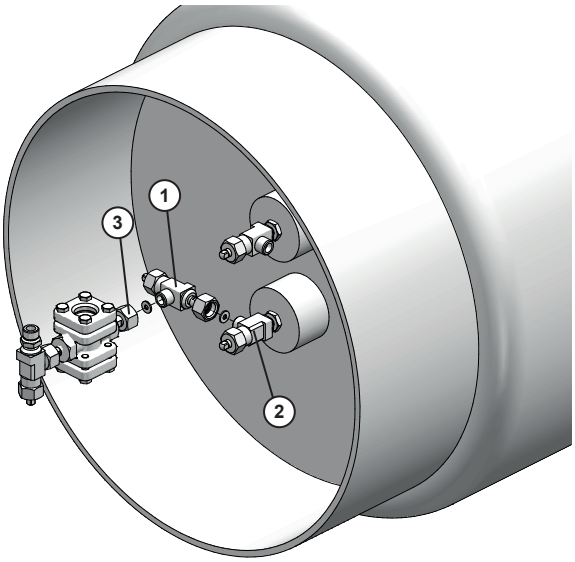

Fig. 6: Installing the device onto a drum

Resources required:

🛠 Wrench for the operation of chlorine auxiliary valves

Perform the following working steps:

1. Screw a auxiliary chlorine valve (1) to the connection of the chlorine tank valve (2) with the union nut and the seal. The tightening torque is approx. 40 Nm.
2. Place a seal on the sealing surface on the connection with the device union nut (3).
3. Screw the device onto the chlorine auxiliary valve connection (1). The tightening torque is approx. 40 Nm.

✓ **The device is fitted on a drum.**

7.2.2 Device with flange connection

Flanges with tongue and groove in accordance with EN 1092 Form C and D are located at the ends of the device. Appropriate counter-flanges must be used to make the flange connection.

Precondition for action:

✓ The transport protection of the equipment is removed.

✓ The flange sealing faces are free from contamination and damage.

✓ The flange seals must be clean, undamaged and dry.

✓ Bolts, nuts and washers are clean and undamaged.

✓ The distance between the pipe flanges equals the length of the device.

✓ The flange faces of the pipe flanges are parallel and aligned.

Resources required:

🛠 Torque wrench AF19, 20 – 50 Nm

Any bolts, nuts and washers that are removed during installation must be replaced with new ones. Used bolts, nuts and washers may only be installed if they are in new condition.

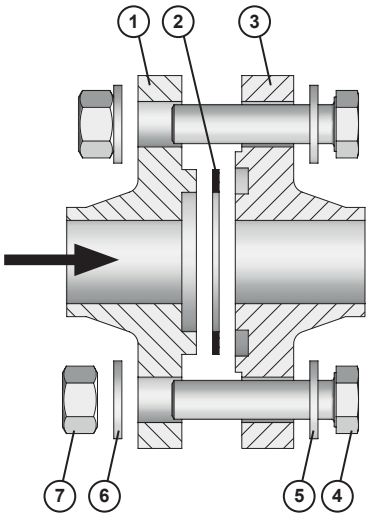

Fig. 7: Installing the flange connection

© Lutz-Jesco GmbH 2021

Perform the following working steps:

1. Grease the sliding faces and thread of bolts, nuts and washers e.g. using fitting grease or PTFE grease.
2. If necessary, use a suitable tool to spread the pipe flanges apart to facilitate the installation of the device.
3. Slide the fitting between the flanges and place the seal in the groove of the connecting or counter-flange without using force. The seal is fitted in a dry state.
4. Fit the bolts, washers and nuts by hand.
5. When using a tool to spread the flanges, remove it gradually while aligning the connecting flanges step-by-step. Tighten the bolts by hand.
6. Check that the device and the counter-flanges are aligned exactly.
7. Tighten the bolts evenly alternately crosswise in three stages: 20 Nm, 35 Nm, 50 Nm. After this, retighten all the bolts to the full target tightening torque (50 Nm).
8. Setting the seal (adapting to the flange seal surface) can make it necessary to retighten the bolts. For this reason, retighten the bolts to 50 Nm after a few hours.

✓ **This completes the flange connection.**

7.3 Completing the installation

After completing installation, you must check that all the connections are leak-proof (see section 8.1 „Leak test of device with auxiliary valve“ on page 14 and section 8.2 „Leak test of device with flanges“ on page 15).

© Lutz-Jesco GmbH 2021
Subject to technical changes.
211101

8 Commissioning

Precondition for action:

✓ The installation has been carried out correctly.

8.1 Leak test of device with auxiliary valve

WARNING

Danger of personal injury and material damage!

If the leak-tightness check is not carried out correctly, leakage may occur or the system may even get destroyed.

⇨ The leak test must be performed by sufficiently-qualified personnel (see chapter 2).

⇨ Wear a respirator mask (see chapter 2).

8.1.1 Carrying out the leak test with nitrogen

You are strongly recommended to carry out this inspection before carrying out the leak test with chlorine, since it shows leaks without the risk of chlorine escaping. As an alternative, you can carry out the inspection using dry compressed air.

Precondition for action:

✓ The chlorine tank valve is closed.

✓ The chlorine auxiliary valve on the chlorine drum is closed.

✓ The chlorine auxiliary valve on the flow inspection glass is closed.

✓ A nitrogen cylinder with pressure-relief valve was connected to the chlorine auxiliary valve of the flow inspection glass.

Resources required:

🛠 Soap solution or leak detection spray

Perform the following working steps:

1. Slowly raise the system pressure at the nitrogen cylinder's pressure reducer to 10 bar.
2. Open both chlorine auxiliary valves.
3. Close the nitrogen cylinder's valve.
4. Apply soap solution to all the potential leaks.
   ▶ Bubbles form at leak locations (with a possible time delay).
5. Repair the leak.
6. Repeat the leak test using nitrogen.

✓ **Leak test with nitrogen carried out.**

8.1.2 Carrying out the leak test with chlorine

DANGER

Danger to life from chlorine poisoning!

If you start the leak test with chlorine gas before the entire system has been installed and the injectors are ready for operation, chlorine gas may not be extracted immediately in the event of a leak.

⇨ Make sure that all the components in the plant are installed correctly and the injectors are ready for operation before starting the leak test with chlorine gas.

⇨ Put on protective clothing before carrying out the leak test with chlorine gas.

Precondition for action:

✓ The leak test with nitrogen has been carried out successfully.

✓ All the open connections of the pressure system were closed correctly.

✓ All shutoff valves in the piping system have been closed.

✓ A chlorine tank has been closed (at the gas take-off of the chlorine tank).

✓ The injector is ready for operation.

Resources required:

🛠 Cylinder with ammonia solution

Perform the following working steps:

1. Briefly open the chlorine container valve and close it again.
2. Open the first valve in the pipe line, starting from the chlorine tank.
3. Carry out the ammonia test at the pipeline section up to the first closed valve: Hold an open bottle containing the ammonia solution close to the pipe and make slight pumping motions with the plastic bottle. Ammonia steam with chlorine forms a white vapour and makes even very small leaks visible.

PLEASE NOTE

Damage to the plant by the ammonia solution

If the ammonia solution comes into contact with the plant, this leads to corrosion on the equipment.

⇨ Make sure that you do not spill any ammonia.

© Lutz-Jesco GmbH 2021

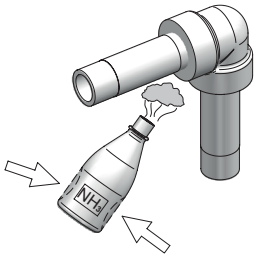

Fig. 8: Leak test with ammonia

4. Open additional downstream valves in the pipe line in sections. In each case, let a little chlorine gas into the system and close the valves again. Then carry out the ammonia test at this pipe line section and the associated fittings. Proceed in this manner until all piping and fittings have been tested for leaks.

If you find leaks:

1. Close the chlorine tank valve.
2. Use the injector to suck off the remaining chlorine.
3. Operate the chlorination installation for approx. 5 minutes with nitrogen or dry compressed air at approximately 5 bar.
4. Switch off the injector at the booster pump.
5. Repair the leak. Allow any adhesive surfaces to harden sufficiently and repeat the leak test.

If you do not find any leaks:

1. Close the chlorine tank valve.
2. Depressurise the system using the injector to evacuate the piping.
3. Switch off the injector at the booster pump.

✓ **Leak test with chlorine gas completed.**

8.2 Leak test of device with flanges

8.2.1 Carrying out the leak test with nitrogen

> You are strongly recommended to carry out this inspection before carrying out the leak test with chlorine, since it shows leaks without the risk of chlorine escaping. As an alternative, you can carry out the inspection using dry compressed air.

Precondition for action:

- ✓ All the open connections of the pressure system were closed correctly.
- ✓ All the shut-off valves in the pipe system were opened.
- ✓ A nitrogen cylinder with a pressure reducer (0 – 25 bar) has been connected.

Perform the following working steps:

1. Slowly raise the system pressure at the nitrogen cylinder's pressure reducer to 10 bar.
2. Close the nitrogen cylinder's valve.
3. Apply soap solution to all the potential leaks.
   - ▶ Bubbles form at leak locations (with a possible time delay).
4. Close the outlet on the nitrogen cylinder's pressure reducer and observe the pressure gauge in the installation.
   - ▶ The pressure must not drop within one hour.
5. Repair the leak. Allow any adhesive surfaces to harden sufficiently and repeat the leak test with nitrogen.

✓ **Leak test with nitrogen carried out.**

8.2.2 Carrying out the leak test with chlorine

DANGER

Danger to life from chlorine poisoning!

If you start the leak test with chlorine gas before the entire system has been installed and the injectors are ready for operation, chlorine gas may not be extracted immediately in the event of a leak.

⇨ Make sure that all the components in the plant are installed correctly and the injectors are ready for operation before starting the leak test with chlorine gas.

⇨ Put on protective clothing before carrying out the leak test with chlorine gas.

Precondition for action:

- ✓ The leak test with nitrogen has been carried out successfully.
- ✓ All the open connections of the pressure system were closed correctly.
- ✓ All shutoff valves in the piping system have been closed.
- ✓ A chlorine tank has been closed (at the gas take-off of the chlorine tank).
- ✓ The injector is ready for operation.

Resources required:

🛠 Cylinder with ammonia solution

Perform the following working steps:

1. Briefly open the chlorine container valve and close it again.
2. Open the first valve in the pipe line, starting from the chlorine tank.
3. Carry out the ammonia test at the pipeline section up to the first closed valve: Hold an open bottle containing the ammonia solution close to the pipe and make slight pumping motions with the plastic bottle. Ammonia steam with chlorine forms a white vapour and makes even very small leaks visible.

© Lutz-Jesco GmbH 2021
Subject to technical changes.
211101

PLEASE NOTE

Damage to the plant by the ammonia solution

If the ammonia solution comes into contact with the plant, this leads to corrosion on the equipment.

⇨ Make sure that you do not spill any ammonia.

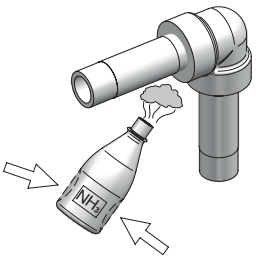

Fig. 9: Leak test with ammonia

4. Open additional downstream valves in the pipe line in sections. In each case, let a little chlorine gas into the system and close the valves again. Then carry out the ammonia test at this pipe line section and the associated fittings. Proceed in this manner until all piping and fittings have been tested for leaks.

If you find leaks:

1. Close the chlorine tank valve.
2. Use the injector to suck off the remaining chlorine.
3. Operate the chlorination installation for approx. 5 minutes with nitrogen or dry compressed air at approximately 5 bar.
4. Switch off the injector at the booster pump.
5. Repair the leak. Allow any adhesive surfaces to harden sufficiently and repeat the leak test.

If you do not find any leaks:

1. Close the chlorine tank valve.
2. Depressurise the system using the injector to evacuate the piping.
3. Switch off the injector at the booster pump.

✓ **Leak test with chlorine gas completed.**

© Lutz-Jesco GmbH 2021

9 Operation

DANGER

Chlorine gas can escape due to systems that are leaky or not installed correctly

Chlorinators constitute an increased safety risk if they have not been properly installed, if an adequate leak test has not been performed or if the devices are not in good condition.

- ⇨ Before placing the system into operation, have it checked by technical personnel to ensure that it is in the proper condition and leaktight.
- ⇨ The condition of the installation must be checked for adequate tightness on a regular basis.
- ⇨ Ensure that all action is taken only by personnel with sufficient and corresponding qualifications.

A correctly installed flow inspection glass works independently and does not require any auxiliary energy for this purpose.

9.1 Shutting down in an emergency

DANGER

Danger to life from chlorine poisoning!

Chlorine is poisonous. In severe cases, breathing in chlorine may lead to death. It irritates the eyes, the respiratory system and the skin.

- ⇨ If chlorine escapes, leave the room immediately.
- ⇨ Use sufficient personal protective equipment.
- ⇨ Always use breathing apparatus with a Type B gas filter that complies with EN 14387.
- ⇨ Only initiate counter measures after putting on the protective equipment.

The chlorine tank valves must be closed.

The further procedure depends on the type of accident and should be planned and executed by professional personnel.

9.2 Test intervals

You must check the components of the chlorine system for leaks on a daily basis and after maintenance or commissioning work.

10 Shutdown

10.1 Short-term shutdown

Perform the following working steps:

1. Close the chlorine tank valves.
2. Use the injector to suck off the remaining chlorine.
3. Switch off the ejector.

✓ **Chlorinator shut down for the short term.**

10.2 Long-term shutdown

Perform the following working steps:

1. Close the chlorine tank valves.
2. Use the injector to suck off the remaining chlorine.
3. Operate the chlorination installation for approx. 5 minutes with nitrogen or dry compressed air at approximately 5 bar.
4. Close all the connections to protect the lines and devices from humidity and dirt.
5. Switch off the ejector.

✓ **Chlorinator shut down for the long term.**

We recommend maintenance after a longer standstill period (see chapter 11 „Maintenance“ on page 18).

10.3 Storage

PLEASE NOTE

Damage to the plant due to the formation of hydrochloric acid

Chlorine gas is highly hygroscopic. This means that humidity enters the system at any open connection on devices or pipes, which results in the formation of hydrochloric acid and contamination. thus inevitably causing damage to the units.

- ⇨ Keep all connections (including in the vacuum system and on all devices not currently in use) closed at all times.

Storing the device correctly will extend its service life. You should avoid negative influences such as humidity, dirt, frost, etc.

10.4 Disposal of old equipment

- Before disposing of the old equipment, you must clean off the remaining chlorine by rinsing it with nitrogen or air.
- The device must be disposed of in accordance with applicable local laws and regulations. It should not be disposed of as domestic waste!

As the disposal regulations may differ from country to country, please consult your supplier if necessary. In Germany, the manufacturer must provide free-of-charge disposal provided the device has been safely returned along with a declaration of no objection (see page 20).

© Lutz-Jesco GmbH 2021
Subject to technical changes.
211101

11 Maintenance

Under normal operating and ambient conditions, the flow inspection glass is maintenance-free. However, some parts are subject to operational wear. This means that regular visual inspections are necessary to ensure a long operating life. Regular maintenance will protect the device from operation interruptions.

WARNING

Increased risk of accidents due to insufficient qualification of personnel!

Chlorinators and their accessories must only be installed, operated and maintained by personnel with sufficient qualifications. Insufficient qualification will increase the risk of accidents.

⇨ Ensure that all action is taken only by personnel with sufficient and corresponding qualifications.

11.1 Maintenance intervals

Chlorine system components must be regularly maintained to prevent malfunctions and hazards. This table gives you an overview of the maintenance work.

Interval	Maintenance
As required	■ Visual inspection: Check the cleanliness of the glass panes.
Annually	■ Clean or renew the glass panes. ■ Renew the seals in the clamping flange

Tab. 5: Maintenance intervals

In some cases, regional regulations may require shorter maintenance intervals. Maintenance intervals depend only on how frequently the equipment is used. Chemical wear of seals, for example, begins with the initial contact with the medium and continues irrespective of the usage type.

11.2 Preparing the system for maintenance

DANGER

Danger to life from chlorine poisoning!

Do not carry out maintenance or any other work on the chlorinator until the system has been decommissioned and all of the chlorine gas has been removed from the lines. The failure to follow this instruction presents a significant risk of injury.

⇨ Proceed in accordance with the following instructions.

Resources required:

- Wrench for the auxiliary valves (in devices with an auxiliary valve).

Perform the following working steps:

1. Close the chlorine tank valve.
2. Use the injector to suck off the remaining chlorine.
   ▶ The system is depressurized.
3. Switch off the ejector.
4. Connect the chlorine auxiliary valve to the chlorine tank. Use the wrench intended for this purpose by the manufacturer.

✓ **The system is prepared for maintenance.**

11.3 Device maintenance

Precondition for action:

✓ The system is prepared in accordance with section 11.2 „Preparing the system for maintenance“ on page 18.

✓ All feed and discharge lines have been depressurised.

Resources required:

- Wrench for the auxiliary valves (in devices with an auxiliary valve).
- Torque wrench AF16, 20 – 50 Nm
- Washing agent or isopropyl alcohol
- Spare parts set
- New connection seals

Maintaining device with auxiliary valve

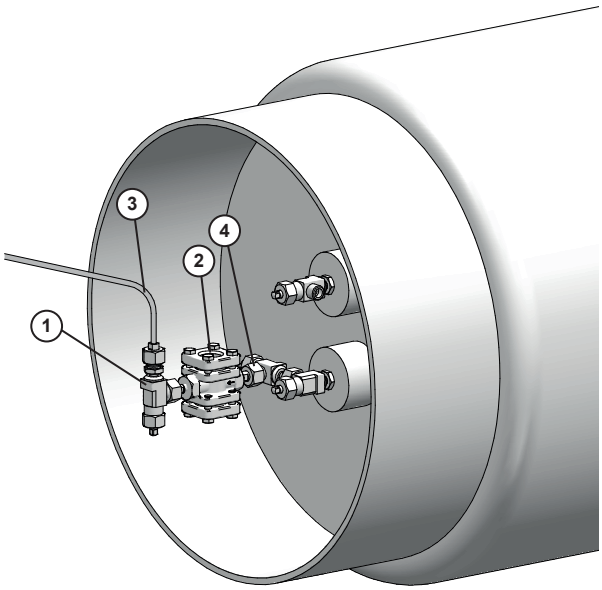

Fig. 10: Maintaining device with auxiliary valve

Perform the following working steps:

1. Connect the chlorine auxiliary valve (1) on the flow inspection glass (2). Use the wrench intended for this purpose by the manufacturer.
2. Unscrew the Chlorine auxiliary valve with the flexible connection line (3) with the union nut from the flow inspection glass and remove the connection seal.

© Lutz-Jesco GmbH 2021

3. Unscrew the flow inspection glass with the union nut from the chlorine auxiliary valve (4) on the chlorine tank and remove the connection seal.
4. Place the device on a clean surface.

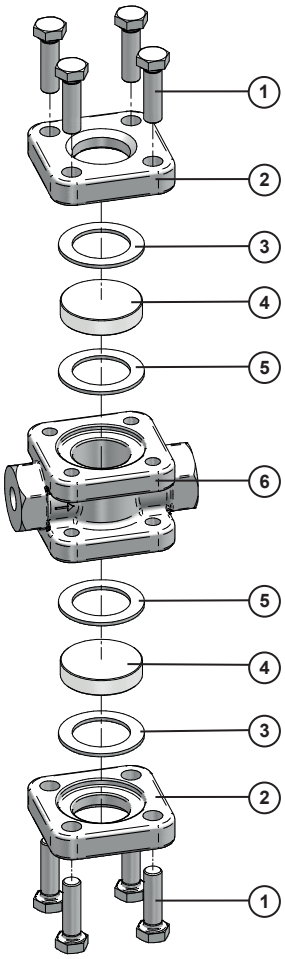

Fig. 11: Maintaining flow sight glass

5. Loosen the socket screws on the first side of the device (1) with which the clamping flange (2) is fixed to the housing (6) of the device.
6. Remove the flat gasket (3), glass pane (4) and the PTFE washer seal (5) one after each other.
7. Repeat steps 5 and 6 for the second side of the device.
8. Check the sealing surfaces of the device for soiling and damage.
9. Clean the inside and outside of the device with a mild washing agent or isopropyl alcohol and allow the device to dry completely before proceeding.
10. Take a flat gasket, a glass pane and a PTFE washer seal from the spare parts set and place these parts in reverse order in one of the two recesses provided for this purpose in the housing of the device.
11. Take one of the two clamping flanges and mount it to one side of the housing using 4 socket screws. Tighten the bolts evenly alternately crosswise in two stages: 20 Nm and 40 Nm.
12. Repeat steps 10 and 11 for the second part of the housing.

✓ **Device with auxiliary valve maintained.**

Maintaining device with flanges

> The maintenance of the device with flanges can also be carried out without having to remove the fitting.
> ➔ Perform maintenance steps 5 to 12 for the device with auxiliary valve.

11.4 Finishing maintenance

> After completing maintenance, check the device for leaks (see section 8 „Commissioning“ on page 14).

12 Troubleshooting

The device is very robust and works trouble-free. If a leakage occurs on the connections or on the glass pane during operation, the device requires maintenance.

13 Information about EU conformity

The devices fall under the purview of the pressure equipment directive 2014/68/EU. The values stated below do not exceed the limit values in according to article 4, paragraph 1. Therefore, it is designed and manufactured in accordance with valid good engineering practice This pressure devices may not carry a CE marking and an EU declaration of conformity will not be issued.

Device designation:	Flow sight glass
Max. pressure:	PN40
Max. temperature:	50 °C
Medium:	Chlorine, fluid group 1

The device fulfils all the demands made by the directive(s)

2014/68/EU	Pressure equipment directive

© Lutz-Jesco GmbH 2021
Subject to technical changes.
211101

14 Declaration of no objection

Please copy the declaration, stick it to the outside of the packaging and return it with the device.

Declaration of no objection

Please fill out a separate form for each appliance!

We forward the following device for repairs:

Device and device type: ..... Part-no.: .....

Order No.: ..... Date of delivery: .....

Reason for repair: .....

.....

.....

Dosing medium

Description: ..... Irritating: ☐ Yes ☐ No

Properties: ..... Corrosive: ☐ Yes ☐ No

We hereby certify, that the product has been cleaned thoroughly inside and outside before returning, that it is free from hazardous material (i.e. chemical, biological, toxic, flammable, and radioactive material) and that the lubricant has been drained.

If the manufacturer finds it necessary to carry out further cleaning work, we accept the charge will be made to us.

We assure that the aforementioned information is correct and complete and that the unit is dispatched according to the legal requirements.

Company / address: ..... Phone: .....

..... Fax: .....

..... Email: .....

Customer No.: ..... Contact person: .....

Date, Signature: .....

© Lutz-Jesco GmbH 2021

15 Warranty claim

Warranty claim

Please copy and send it back with the unit!

If the device breaks down within the period of warranty, please return it in a cleaned condition with the complete warranty claim.

Sender

Company: ..... Phone: ..... Date: .....

Address: .....

Contact person: .....

Manufacturer order no.: ..... Date of delivery: .....

Device type: ..... Serial number: .....

Nominal capacity / nominal pressure: .....

Description of fault: .....

.....

.....

.....

.....

.....

.....

.....

Service conditions of the device

Point of use / system designation: .....

.....

.....

Accessories used (suction line etc.): .....

.....

.....

.....

.....

Commissioning (date): .....

Duty period (approx. operating hours): .....

Please describe the specific installation and enclose a simple drawing or picture of the chemical feed system, showing materials of construction, diameters, lengths and heights of suction and discharge lines.

© Lutz-Jesco GmbH 2021
Subject to technical changes.
211101

16 Index

C
Commissioning 14

D
Declaration of no objection 20
Device maintenance 18
Dimensioned drawings 10
Dimensions 10
Disposal of old equipment 17
Dosing media
  Prohibited dosing media 7

E
EC conformity 19

F
Finishing maintenance 19

G
General warnings 5

H
Handling instructions
  Marking 4
Hazards due to non-compliance with the safety instructions 5

I
Information about chlorine 5
Inspecting the pressure system 14
Installation 12
  Flange connection 12
  Manifold 12
Installing the device 12
Installing the flange connection 12
Intended purpose 7
Intended use 7

L
Leak test
  Chlorine gas 14
  Nitrogen 14, 15
Long-term shut-down 17

M
Maintenance 18
  Finishing 19
  Maintenance intervals 18
  Preparing 18

N
Notes for the Reader 4
Notes to EC conformity 19

O
Operation 17

P
Personal protective equipment 6
Personnel qualification 6
Personnel tasks 6
Preparing the system for maintenance 18
Product description 8
Product warranty 7
Prohibited dosing media 7

R
Rating plate 8

S
Safety 5
Scope of delivery 8
Short-term shut-down 17
Shut-down 17
Shutting down in an emergency 17
Signal words
  Explanation 4
Specialist staff 6
Storage 17
Structure of the device 8

T
Technical data 9
Test intervals 17
Trained persons 6
Troubleshooting 19

W
Warnings
  General warnings 5
  Marking 4
Warning sign
  Explanation 4
Warranty claim 21
Working in a safety-conscious manner 6

© Lutz-Jesco GmbH 2021

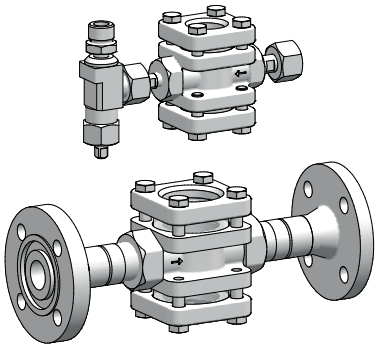

Lutz-Jesco GmbH

Am Bostelberge 19
D-30900 Wedemark

Phone: +49 5130 5802-0
info@lutz-jesco.com
www.lutz-jesco.com

Operating instructions
Flow sight glass