Chlorine Gas Filter

Operating Instructions

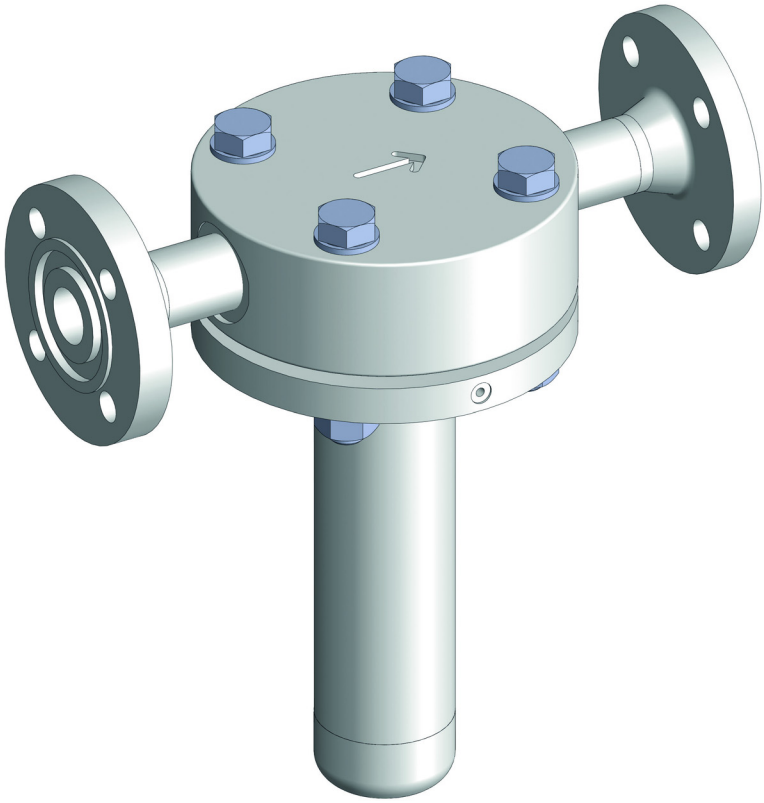

Read the Operating Instructions!

The user is responsible for installation and operation related mistakes!

Original Operating Instructions

© Lutz-Jesco GmbH 2014

BA-23301-02-V02

Dosing Conveying Control | Liquids Gases Systems

Contents

1 Notes to the reader 4
General equal treatment 4
Explanations of signal words 4
Explanations of warning signs 4
Identification of warnings 4
Identification of instructions for action 4

2 Safety 5
General warnings 5
Information about chlorine 5
Hazards due to non-compliance with the safety instructions 6
Safe operation 6
Personal protective equipment 6
Personnel qualification 6

3 Appropriate and intended use 7
Notes on product warranty 7
Intended purpose 7
Prohibited operating conditions 7
Prohibited dosing media 7

4 Product description 8
Scope of delivery 8
Accessories 8
Structure of the Chlorine Gas Filter 8
Technical data 9

5 Dimensions 10

6 Installation 11
Installation location 11
Mounting the chlorine gas filter 11
Mounting the heating sleeve 11
Completing mounting 11
Installation examples 12
Installation of the overpressure line 13

7 Operation 14
Start-up 14
Inspection intervals 15
Shutdown 15
Troubleshooting 15
Disposal of old equipment 15

8 Maintenance 16
Replacing the filter element 16

9 Notes to EU conformity 18

10 Declaration of harmlessness 19

11 Warranty application 20

12 Index 22

© Lutz-Jesco GmbH 2014
Subject to technical changes
141028

1 Notes to the reader

These Operating instructions contain information and behaviour rules for safe and designated operation of the .

Follow these principles:

- Read the entire Operating instructions prior to commissioning the unit.
- Ensure that everyone who works with or on the chlorine gas filter has read the Operating instructions and follows them.
- Maintain the Operating instructions throughout the service life of the chlorine gas filter.
- Pass the Operating instructions on to any subsequent owner of the chlorine gas filter.

1.1 General equal treatment

In these Operating instructions only the masculine gender is used where grammar allows gender allocation. The purpose of this is to make the text easy to read. Men and women are always referred to equally. We would like to ask female readers for understanding of this text simplification.

1.2 Explanations of signal words

Different signal words in combination with warning signs are used in these Operating instructions. Signal words illustrate the gravity of possible injuries if the risk is ignored:

Signal word	Meaning
DANGER!	Refers to imminent danger. Ignoring this sign may lead to death or the most serious injuries.
WARNING!	Refers to a potentially hazardous situation. Ignoring this sign might lead to death or the most serious injuries.
CAUTION!	Refers to a potentially hazardous situation. Ignoring this sign may lead to light injuries or damage to property.
NOTE!	Refers to a danger which, if ignored, may compromise the unit or its function.

Table 1-1: Explanations of signal words

1.3 Explanations of warning signs

Warning signs represent the type and source of a danger:

Warning sign	Type of danger
	Danger to life from chlorine poisoning
	General danger zone
	Danger of damage to machine or compromised function.

Table 1-2: Explanations of warning signs

1.4 Identification of warnings

Warnings shall help you recognise risks and avoid negative consequences.

This is how warnings are identified:

Warning sign	SIGNAL WORD
Description of danger. Consequences if ignored. ⇨ The arrow signals a precautionary measure to be taken to eliminate the danger.	

1.5 Identification of instructions for action

This is how pre-conditions for action are identified:

✓ Pre-condition for action which must be met before taking action.

This is how instructions for action are identified:

➔ Separate step with no follow-up action.

1. First step in a series of steps.
2. Second step in a series of steps.

▶ Result of the above action.

✓ **Action completed, aim achieved.**

© Lutz-Jesco GmbH 2014
Subject to technical changes
141028

2 Safety

2.1 General warnings

The following warnings are intended to help you eliminate the dangers that can arise while handling the Chlorine Gas Filter. Risk prevention measures always apply regardless of any specific action.

Safety instructions warning against risks arising from specific activities or situations can be found in the respective sub-chapters.

DANGER!

Danger to life from chlorine poisoning

Chlorine is poisonous. In severe cases, breathing in chlorine may lead to death. It irritates the eyes, the respiratory system and the skin.

⇨ Use sufficient personal protective equipment.

⇨ When carrying out any assembly and maintenance work, always use breathing apparatus with a Type B gas filter that complies with EN 14387.

⇨ Always comply with the accident prevention regulations that apply at the place of use.

DANGER!

Danger to life from chlorine poisoning

If chlorine gas escapes, a filter mask is ineffective, since it is not a self-contained breathing apparatus.

⇨ If chlorine gas escapes, wear a Type 2 self-contained breathing apparatus that complies with EN 137.

DANGER!

Danger to life from chlorine poisoning

Leaks may allow chlorine gas to escape. In severe cases, breathing in chlorine may lead to death.

⇨ Get rid of leaks without delay.

⇨ Only use seals once. Reusing them leads to leaks.

DANGER!

Danger to life from chlorine poisoning

Chlorinators without gas warning devices are an increased safety risk, since it is not possible to detect escaping chlorine gas in good time or at all.

⇨ Install a gas warning device.

WARNING!

Increased risk of accidents due to insufficient qualification of personnel

Chlorinators and their accessories must only be installed, operated and maintained by personnel with sufficient qualifications. Insufficient qualification will raise the risk of accidents.

⇨ Ensure that all action is taken only by personnel with sufficient and corresponding qualifications.

⇨ Prevent access to the system for unauthorised persons.

NOTICE

Damage to the plant due to the formation of hydrochloric acid

Chlorine gas is highly hygroscopic. This means that humidity enters the system at any open connection on equipment or pipes, which results in the formation of hydrochloric acid that inevitably causes damage to the equipment.

⇨ Keep all the connections closed at all times.

⇨ You must get rid of even very minor leaks without delay. Together with the humidity, chlorine forms hydrochloric acid and corrosion results in increased leakage.

2.2 Information about chlorine

Chlorine is a hazardous substance. The chemical element chlorine is a green-yellow, toxic gas with pungent odour. It is 2.5 times heavier than air and accumulates at ground level. It is toxic when inhaled. In severe cases chlorine may lead to death. It irritates the eyes, the respiratory system and the skin.

Chlorine is extremely toxic for water organisms. The reason for the toxicity of chlorine is its extraordinary reactivity. It reacts with animal and vegetable tissue and thus destroys it.

Air with a chlorine gas content of 0.5-1% leads to a quick death in mammals and humans, as it attacks the respiratory tract and the pulmonary alveolus (formation of hydrogen chloride or hydrochloride acid).

© Lutz-Jesco GmbH 2014
Subject to technical changes
141028

2.3 Hazards due to non-compliance with the safety instructions

Failure to observe the safety instructions can pose a risk not only to the personnel, but consequentially to the environment and the unit.

The specific consequences can be:

- Failure of vital functions of the Chlorine Gas Filter and the system,
- failure of required maintenance and repair methods,
- danger for individuals due to chlorine gas escaping,
- danger to the environment through substances leaking from the system.

2.4 Safe operation

Besides the safety instructions specified in these Operating instructions, further safety rules apply and must be followed:

- Accident prevention regulations,
- safety and operating provisions,
- Safety regulations on handling dangerous substances,
- environmental protection provisions,
- applicable standards and legislation.

2.5 Personal protective equipment

Depending on the type of work you are carrying out, you must use appropriate protective equipment. Read the Accident Prevention Regulations and the Safety Data Sheets to the dosing media find out what protective equipment you need.

As a minimum, the following protective equipment is recommended:

Mask Protective clothing Gloves Safety footwear

Corresponding protective equipment must be used during these tasks:

- Commissioning,
- all work on gas-bearing sections of the plant
- changing the chlorine gas containers,
- decommissioning,
- maintenance work,
- disposal.

2.6 Personnel qualification

The precondition for any work on the Chlorine Gas Filter is special knowledge and skills of the personnel who operate the system.

Every person who works with the Chlorine Gas Filter must fulfil the preconditions specified below:

- Personal suitability for the respective job.
- Sufficient qualification for the respective job.
- Training in handling the Chlorine Gas Filter.
- Knowledge of safety equipment and the way this equipment functions.
- Knowledge of these Operating instructions, particularly of safety instructions and sections relevant for the job.
- Knowledge of fundamental regulations regarding health and safety and accident prevention.

All persons must generally have the following minimum qualification:

- Education as experts to perform work on their own.
- Sufficient training, so that they can work under the supervision and guidance of a trained expert.

These Operating instructions differentiate these user groups:

2.6.1 Expert staff

Expert staff are able, thanks to their professional training, knowledge and experience as well as knowledge of the respective provisions, to do the job allocated to them and recognise and/or eliminate any possible dangers by themselves.

2.6.2 Trained electrician

Due to their professional training, knowledge and experience as well as knowledge of specific standards and provisions, trained electricians are able to do the electrical work assigned to them and to recognise and avoid any potential dangers by themselves.

They are specially trained for their specific working environment and are familiar with relevant standards and provisions.

The must comply with the legally binding regulations on accident prevention.

2.6.3 Trained person

Trained persons have been trained by the operator into the tasks they are supposed to perform and into the dangers stemming from improper behaviour.

Trained persons have attended all trainings offered by the operator.

In the table below you can check what qualifications are the pre-condition for the respective tasks. Only persons with corresponding qualification are allowed to perform these tasks.

Qualification	Tasks
Expert staff	■ Assembly ■ Hydraulic installations ■ Maintenance ■ Repairs ■ Commissioning ■ Decommissioning ■ Disposal ■ Troubleshooting
Trained electrician	■ Electrical installation of heating sleeve ■ Eliminating electrical faults
Trained person	■ Storage ■ Transportation ■ Control

Table 2-1: Personnel qualification

3 Appropriate and intended use

3.1 Notes on product warranty

Any non-designated use of the product can compromise its function or intended protection. This leads to invalidation of any warranty claims!

Please note that liability is on the side of the user in the following cases:

- If the Chlorine Gas Filter is operated in a manner which is not consistent with these Operating instructions in particular with the safety instructions, the handling instructions and the chapter entitled „Appropriate and intended use".
- If people operate the product who are not adequately qualified to carry out their respective activities.
- If non-original spare parts or accessories of Lutz-Jesco GmbH are used.
- If unauthorised changes are made to the device by the user.
- If the user uses different dosing media than those indicated in the order.

3.2 Intended purpose

- The chlorine gas filter is used in chlorine gas dosing systems for separating reliquefied chlorine gas and filtering the contaminants and solid matter that the chlorine gas contains.
- Using the heating sleeve that is available as an accessory, it is possible to evaporate the separated liquid chlorine in the chlorine gas filter.

3.3 Prohibited operating conditions

- The Chlorine Gas Filter is only intended for the applications described in Section 3.2 „Intended purpose“.
- You must comply with the information on usage and environmental conditions (see „Technical data“ on page 9).
- The Chlorine Gas Filter is not intended for use out of doors.
- The unit must not be operated if protective equipment has been removed and/or has not been properly installed or is dysfunctional.

3.4 Prohibited dosing media

You must not use the Chlorine Gas Filter for the following media and substances:

- Any gases except chlorine gas,
- Liquids,
- Solid substances.

© Lutz-Jesco GmbH 2014
Subject to technical changes
141028

4 Product description

4.1 Scope of delivery

Carefully check the delivery prior to installation and refer to the delivery note to ensure the delivery is complete and to check for any transport damage. Contact the supplier and/or carrier regarding any questions concerning the delivery and/or transport damage. Do not operate defective devices.

The version without counterflanges includes the following scope of delivery:

- Chlorine Gas Filter
- Flange seals DN 25 (2 pcs)
- Bolts (8 pcs, M12x50, DIN 931)
- Operating Manual

Versions with counterflanges include the scope of delivery stated above as well as the following:

- Counterflange DN 25 – 1" NPT female thread with tongue and groove (2 pcs) or
- Counterflange DN 25 – 1" NPT welding neck flange with tongue and groove (2 pcs)

The filter is assembled ready-to-install. All the flange openings are closed by transportation locks.

4.2 Accessories

4.2.1 Flange

Description	Part No.
Counterflange - 1" NPT female thread with tongue	15927
Counterflange - 1" NPT female thread with groove	15928
Counterflange - welding neck flange with tongue	39516
Counterflange - welding neck flange with groove	39517

Table 4-1: Flange

4.2.2 Heating sleeve

The optional heating sleeve virtually surrounds the filter hood and ensures that the relatively small amount of liquid chlorine in the chlorine gas filter evaporates.

Delivered complete with fastening materials.

Description	Part No.
Heating sleeve 240 VAC 50/60 Hz, without plug	40204
Heating sleeve 120 VAC 50/60 Hz, without plug	40205

Table 4-2: Heater

4.3 Structure of the Chlorine Gas Filter

The chlorine gas filter consists of a ceramic filter element that is located in a steel housing known as a "filter hood" and of a filter head with welded flanges for connecting the chlorine gas filter to the chlorine gas line.

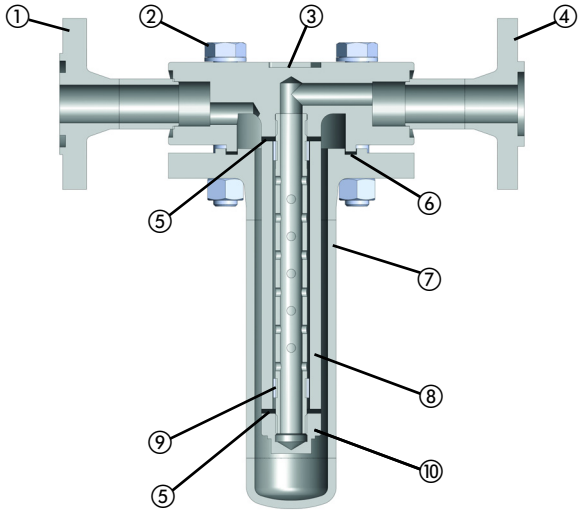

Fig. 4-1: Structure of the Chlorine Gas Filter

Item	Description
①	Inlet connecting flange:
②	Housing bolts
③	Filter head
④	Outlet connecting flange:
⑤	Seal on filter element
⑥	Housing seal
⑦	Filter hood
⑧	Filter element
⑨	Spacer sleeve
⑩	Screw cap

Table 4-3: Designations of the components of the chlorine gas filter

© Lutz-Jesco GmbH 2014
Subject to technical changes
141028

4.3.1 Nameplate

The nameplate shows information on the safety and functional method of the Chlorine Gas Filter. The nameplate must stay legible for the duration of the service life of the product.

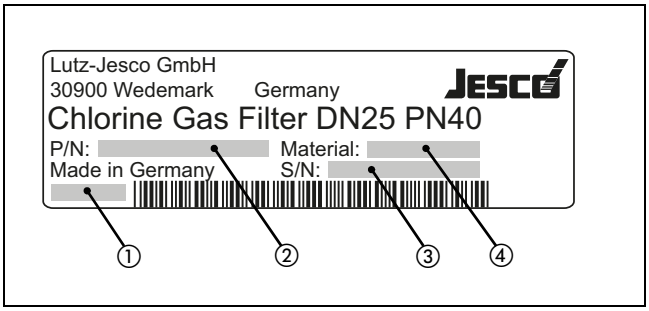

Fig. 4-2: Nameplate

Position	Meaning
①	Month / year of manufacture
②	Part number
③	Serial number
④	Housing material / sealing material

Table 4-4: Information on the nameplate

4.4 Technical data

Description	value
Throughput at 2 bar	100 kg Cl_2/h
Throughput at 6 bar	200 kg Cl_2/h
Max. operating pressure	PN 40
Weight	Approx. 20 kg
Max. operating temperature:	80° C
Connection of pipework	DN 25
Material of housing	C-steel
Material of seals	FPM, Klingersil
Filter material	Ceramic
Connections	DN 25 / PN 40 with groove (inlet) and tongue (outlet) according to EN 1092-1

Table 4-5: Technical data

5 Dimensions

All dimensions in mm

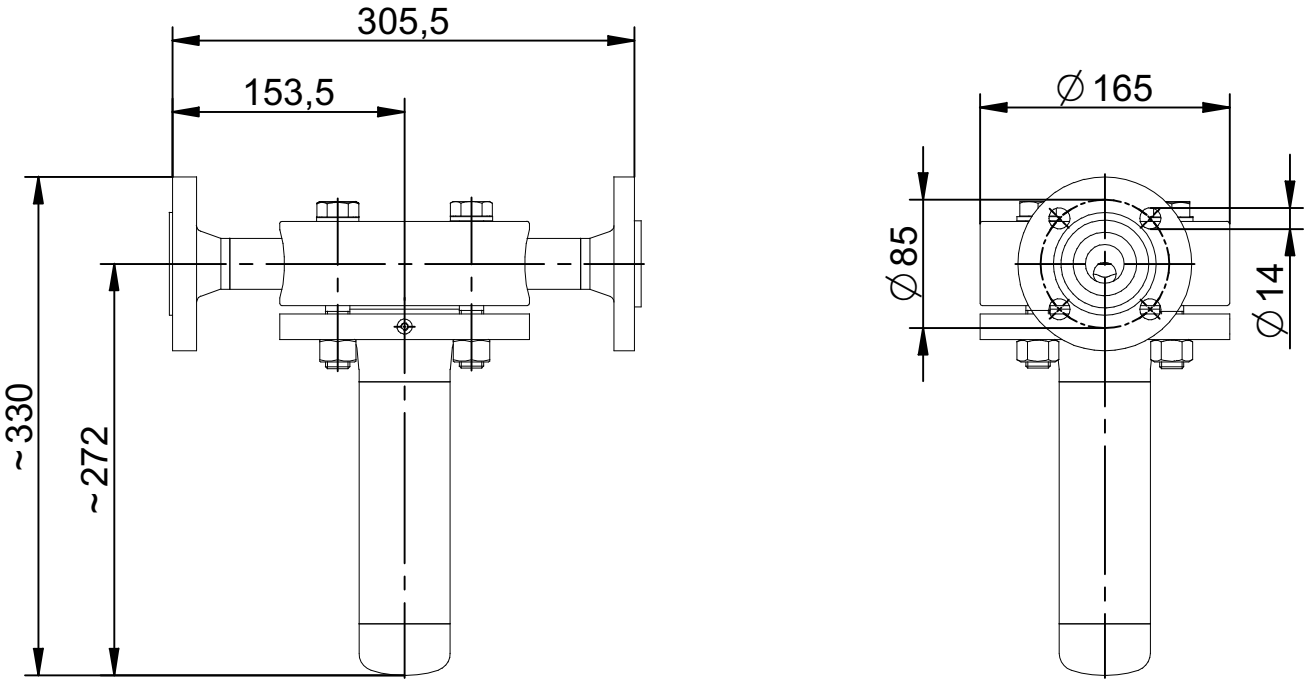

Fig. 5-1: Dimensions of chlorine gas filter

6 Installation

WARNING!

Danger of personal injury and material damage

The chlorine gas filter weighs approximately 20 kg. If the device is not fixed adequately, there is a danger of injury due to pipes bursting. During operation, this can also lead to chlorine gas escaping.

⇨ Make sure that the filter is adequately fixed in the pipe.

6.1 Installation location

The chlorine gas filter is installed in the overpressure line in front of the pressure reducing valve; in systems with chlorine evaporators, the installation location is between the chlorine evaporator and the pressure reducing valve.

You should mount the Chlorine Gas Filter such there is a clear space below the flange of at least 300 mm to allow access for maintenance.

6.2 Mounting the chlorine gas filter

Precondition for action:

✓ The flanges are free from temporary coatings, e.g. to protect from corrosion.

✓ The sealing surfaces of the flanges are free of contamination and damage.

✓ Bolts, nuts and washers are clean and undamaged. In this connection, pay particular attention to the thread and the supporting surfaces.

✓ Seals must be clean, undamaged and dry. You are not allowed to use adhesive paste and fitting lubricant.

Any bolts, nuts and washers that are removed in assembly work must be replaced with new ones according to risk assessment or after inspection if they are damaged. Used bolts, nuts and washers may only be installed if they are in at least new condition.

Perform the following working steps:

1. Before tightening, lubricate the sliding surfaces of the bolts, nuts and washers with suitable lubricants.
2. To make the connection to the chlorine gas line, inflow and outflow flanges with tongues and grooves are welded on the filter head of the chlorine gas filter. These flanges are connected to the corresponding counterflanges of the chlorine gas line.

When mounting, ensure that the installation method is correct. There is an arrow on the end face of the chlorine gas filter's filter head that shows the specified direction of throughflow of the chlorine gas filter.

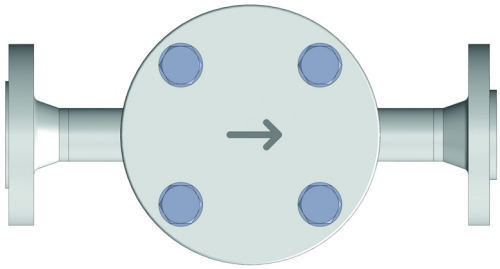

Fig. 6-1: Top view of chlorine gas filter with arrow showing direction of throughflow

3. Tighten the bolts evenly – starting crosswise – in three stages: 20 Nm, 35 Nm and 50 Nm. After this, retighten all the bolts to the full target tightening torque (50 Nm).
4. Setting the seal (adapting to the flange seal surface) can make it necessary to retighten the bolts. This means that you should retighten the bolts again after a few hours with the flange connection depressurized.

✓ **Chlorine gas filter mounted.**

6.3 Mounting the heating sleeve

Perform the following working steps:

1. Push the heating sleeve over the filter hood such that it is located approximately in the middle of the filter hood.
2. The preassembled open ends of the heating sleeve are connected by a qualified electrician to a junction box located on-site. When doing this, you must observe the voltage rating of the heating sleeve.
3. Fasten the ground loop of the heating sleeve to the filter hood of the Chlorine Gas Filter. There is a tapped hole for this purpose on the flange of the filter hood.

✓ **Heating sleeve mounted.**

6.4 Completing mounting

After completing mounting, you must check that all the connections are leak-proof (see Commissioning).

© Lutz-Jesco GmbH 2014
Subject to technical changes
141028

6.5 Installation examples

6.5.1 Installation with a chlorine evaporator

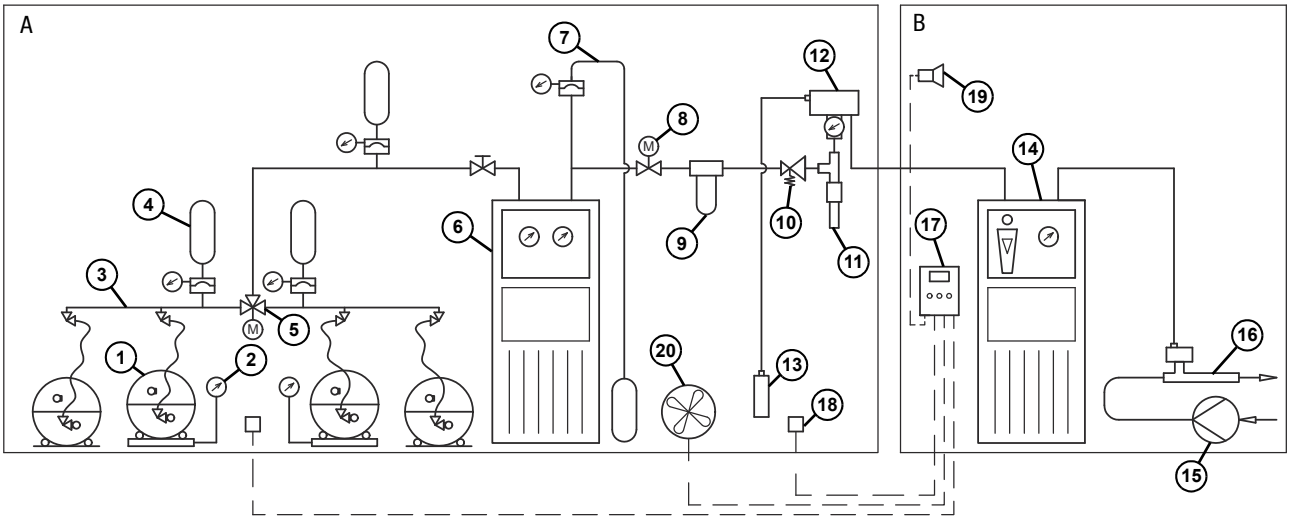

Fig. 6-2: Installation with a chlorine evaporator

Item	Description
A	Space for chlorine supply
B	Dosing unit space
1	Chlorine barrel
2	Chlorine barrel scale
3	Manifold
4	Rupture disk with expansion container
5	Changeover switch
6	Chlorine evaporator
7	Expansion system
8	Quick-action valve
9	Chlorine gas filter
10	Pressure reducing valve
11	Moisture eliminator with heating collar
12	Vacuum regulator
13	Activated carbon cartridge
14	Dosing device
15	Motive water pump
16	Injector with non-return valve
17	Gas warning device
18	Gas sensor
19	Horn
20	Entrance port of the chlorine eliminator

Table 6-1: Designation of components

6.6 Installation of the overpressure line

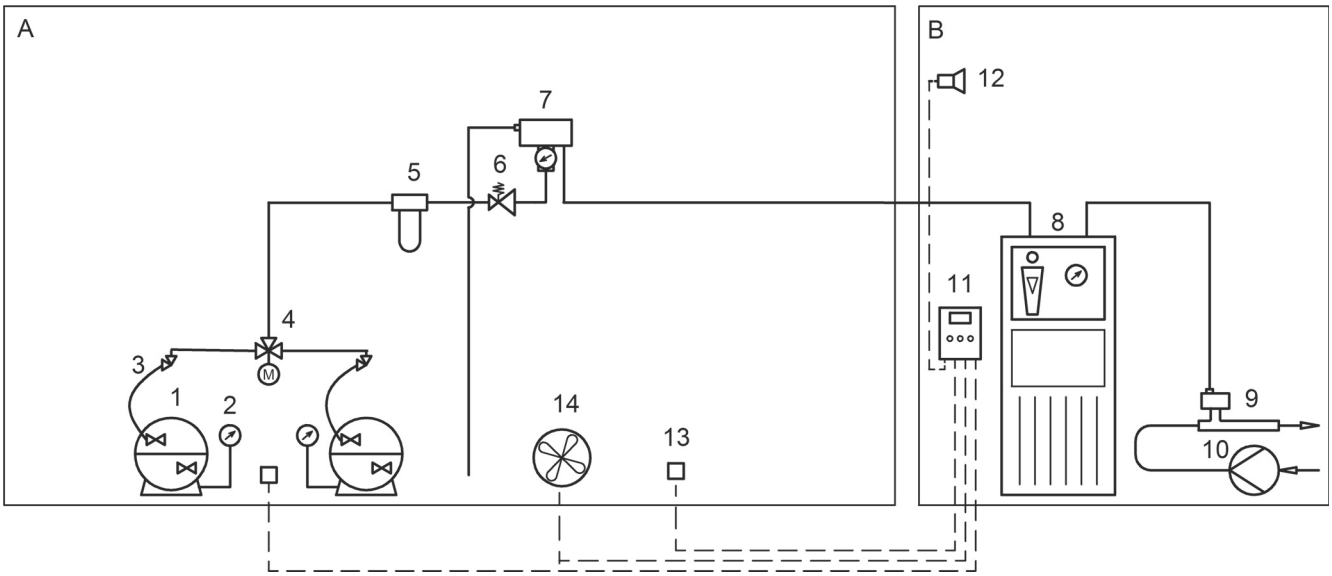

Fig. 6-3: Installation of the overpressure line

Item	Description
A	Space for chlorine supply
B	Dosing unit space
1	Chlorine drum
2	Chlorine drum scales
3	Manifold
4	Changeover switch
5	Chlorine gas filter
6	Pressure reducing valve
7	Vacuum regulator
8	Dosing unit
9	Injector with non-return valve
10	Booster pump
11	Gas warning device
12	Horn
13	Gas sensor
14	Entrance port of the chlorine eliminator

Table 6-2: Designation of components

© Lutz-Jesco GmbH 2014
Subject to technical changes
141028

7 Operation

7.1 Start-up

DANGER!

Chlorine gas can escape due to systems that are leaky or not installed correctly

There is an increased safety risk due to chlorinators that are commissioned without having previously been inspected for adequate tightness and correct installation as well as for all components being in the proper condition.

⇨ Before commissioning the system, have an expert inspect that it is tight and in the proper condition.

⇨ Carry out a regular inspection of the condition of the Chlorine Gas Filter, the connecting flanges and all the other plant components.

WARNING!

Danger of personal injury and material damage

The housing seal may have loosened during transportation of the chlorine gas filter.

⇨ Before commissioning the filter, tighten the bolts evenly crosswise. The maximum tightening torque must not exceed 80 Nm.

7.1.1 Inspecting the pressure system

Check the pressure system of the chlorine container to the Chlorine Gas Filter in two stages:

Carrying out the leak test with nitrogen

You are strongly recommended to carry out this inspection before carrying out the leak test with chlorine, since it demonstrates leaks in the pressure system without the risk of chlorine escaping. As an alternative, you can carry out the inspection using dry compressed air.

Precondition for action:

✓ All the open connections of the overpressure installation were closed.

✓ All the shut-off valves in the pipe system were opened.

✓ A nitrogen cylinder was connected.

Perform the following working steps:

1. Slowly raise the system pressure on the nitrogen cylinder's pressure reducer to the maximum system pressure.
2. Close the nitrogen cylinder's valve.
3. Apply soap solution to all the potential leaks. Bubbles will appear at leak locations.
4. Close the outlet on the nitrogen cylinder's pressure reducer and observe the pressure gauge in the installation. The pressure must not drop within one hour.
5. If necessary, repair leaks and repeat the leak test.

✓ **Leak test with nitrogen carried out.**

Carrying out the leak test with chlorine

DANGER!

Danger to life from chlorine poisoning

If you start the leak test with chlorine before the entire plant has been installed and the injectors are ready for operation, chlorine may not be extracted immediately in the case of a leak.

⇨ Make sure that all the components in the plant are installed correctly and the injectors are ready for operation before starting the leak test with chlorine.

⇨ Put on protective clothing before carrying out the leak test.

Precondition for action:

✓ The leak test with nitrogen was carried out successfully.

✓ All the open connections of the pressure system were closed correctly.

✓ A chlorine container was connected.

Perform the following working steps:

1. Briefly open the chlorine container valve and close it again.
2. Carry out the ammonia test on the entire pressure system: Ammonia steam with chlorine forms a white vapour and makes even very small leaks visible. With the ammonia test, you hold an open bottle containing the ammonia solution close to the pipe and make a slight pumping motion with the plastic bottle.

NOTICE

Damage to the plant by the ammonia solution

If the ammonia solution comes into contact with the plant, this leads to corrosion on the equipment.

⇨ Make sure that you do not spill any ammonia.

3. If you find leaks: Use the injector to suck off the chlorine immediately!
4. After this, repair the leak.
5. Carry out the leak test again.
6. If you do not find any leaks: Briefly open the chlorine container valve and leave it open.
7. Carry out the ammonia test again.

You must get rid of even very minor leaks without delay. Together with the humidity, chlorine forms hydrochloric acid and corrosion results in increased leakage.

✓ **Leak test with chlorine carried out.**

© Lutz-Jesco GmbH 2014
Subject to technical changes
141028

7.2 Inspection intervals

You must check the components of the chlorinator for leaks on a daily basis and after maintenance or commissioning work.

7.3 Shutdown

7.3.1 Short-term shutdown

Perform the following working steps:

1. Close the chlorine gas container valves.
2. Use the injector to suck off the remaining chlorine.
3. Switch off the injector.

✓ **Chlorinator shut down for the short term.**

7.3.2 Long-term shutdown

Precondition for action:

✓ The chlorine gas container valves were closed

✓ The remaining chlorine was sucked off using the injector.

✓ The injector was switched off.

Perform the following working steps:

1. Run the chlorinator for approximately five minutes with nitrogen.
2. Close all the connections to protect the lines and equipment from humidity and dirt.

✓ **Chlorinator shut down for the long term.**

7.4 Troubleshooting

Problem	Possible cause	Remedy
Serious drop in pressure after the Chlorine Gas Filter	Filter blocked	Carry out maintenance, see “Maintenance” on page 16.
Chlorine Gas Filter blocked from inside	Direction of flow is not correct	Clean and replace the connection sides of the connecting piece. The Chlorine Gas Filter must be perfused from outside to inside.
Ice, frost or condensed humidity on the filter hood to a specific height.	Liquid chlorine in the filter hood	Reduce the extraction quantity or attach the heating sleeve and heat the Chlorine Gas Filter.

Table 7-1: Troubleshooting

7.5 Disposal of old equipment

- Before disposal of the Chlorine Gas Filter, you must clean off the remaining chlorine from it by rinsing it with nitrogen or air.
- Any residual dosing media must be removed in a professional manner.
- The Chlorine Gas Filter must be disposed of in accordance with applicable local laws and regulations. The unit does not belong to household waste!

As the disposal regulations may differ from country to country in the European Union, please consult your supplier if necessary.

8 Maintenance

DANGER!

Danger to life from chlorine poisoning

Do not carry out maintenance or any other work on the chlorinator until the plant has been decommissioned and there is no more chlorine gas in the pipes. Otherwise, chlorine gas may escape.

⇨ Close the chlorine container valves before carrying out any work.

⇨ Use the injector to suck out all the chlorine-bearing pipes.

- In order to avoid hazardous incidents, chlorinators must be maintained and tested at least once a year.
- In some cases, regional regulations may require shorter maintenance intervals. Working on the system requires special safety precautions and may only be carried out by instructed technical personnel.
- Carry out maintenance before recommissioning the system after a long period out of service.
- if there is a significant pressure drop across the Chlorine Gas Filter, the filter is very dirty and you must replace it.
- Regardless of the contamination level, you must change the filter element and all the seals at the latest at the end of each year of operation.

The following maintenance kit is available for maintenance:

Maintenance kit	Contents	Part number
Spare parts kit for Chlorine Gas Filters	1x filter element 1x housing seal 2x flat gaskets	40206

Table 8-1: Spare parts sets for Chlorine Gas Filters

8.1 Replacing the filter element

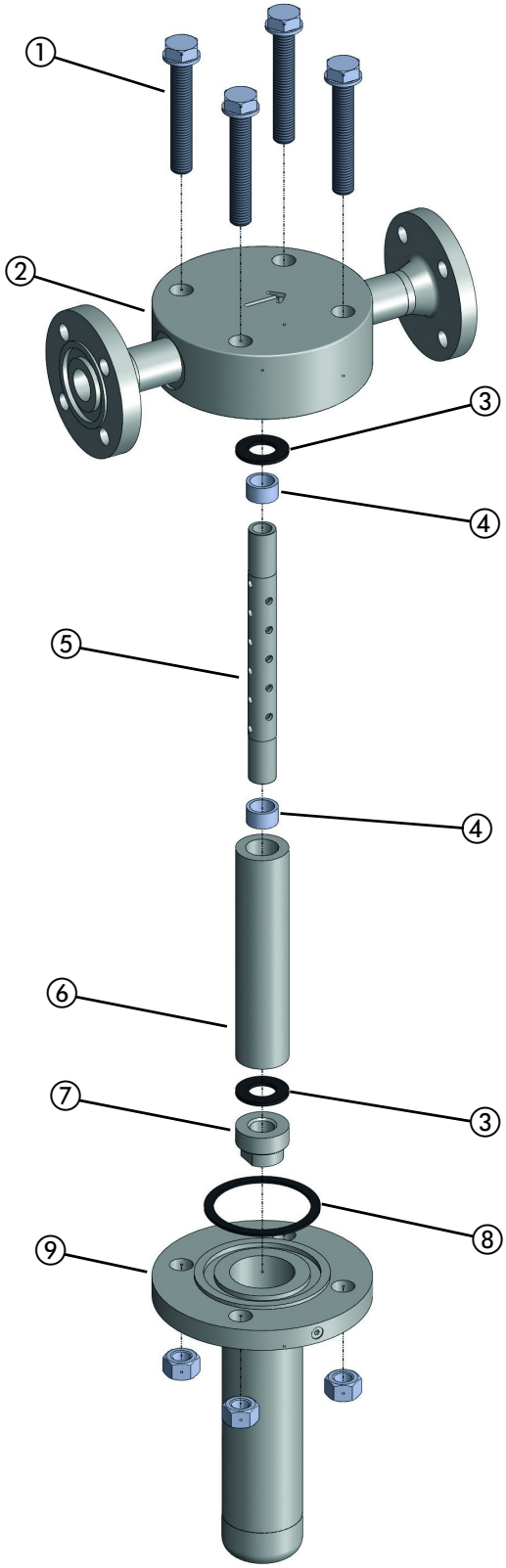

Fig. 8-1: Exploded view of the chlorine gas filter

8.1.1 Dismounting the filter element and the housing seals

Precondition for action:

- ✓ The chlorine gas supply line was closed.
- ✓ The remaining chlorine was sucked off using the injector.
- ✓ The chlorine gas filter was purged with nitrogen for approximately five minutes.
- ✓ All the connections were closed to protect the lines and equipment from humidity and dirt.
- ✓ It is not possible to reconnect the system inadvertently.
- ✓ The chlorine gas filter is not pressurized.

Perform the following working steps:

1. Release the housing bolts ① and take off the filter hood ⑨ downwards.
2. Remove the screw cap ⑦ and the bottom seal ③ on the filter element ⑥. Slowly take off the filter element downwards.
3. Screw the pipe ⑤ out of the filter head ②.
4. Remove the top seal ③ on the filter element ⑥.
5. Remove the housing seal ⑧ in the flange groove in the top part of the filter hood ⑨.
6. Thoroughly clean the filter and the filter hood using lukewarm water and then allow the components to dry completely.

8.1.2 Installing a new filter element and housing seal

Perform the following working steps:

1. Push a new seal ③ over the tube ⑤ to the spacer sleeve ④.
2. Screw the screw cap ⑦ loosely to the seal.
3. Place a spacer sleeve ④ at the bottom on the tube ⑤ and push the tube through the filter element ⑥ until the filter element rests.
4. Place a new seal ③ on the filter element ⑥.
5. Bolt the tube ⑤ back to the filter head ②. After this, tighten the screw cap ⑦ fingertight until the seal ③ is pressed onto the filter element on the filter head ②.
6. Carefully tighten the screw cap ⑦ using a hand wrench until it is not possible to rotate the filter element ⑥.
7. Insert a new housing seal ⑧ into the groove of the filter hood ⑨.
8. Bolt the filter hood ⑨ to the filter head ②. Tighten the bolts evenly – starting crosswise – in three stages: 20 Nm, 50 Nm and 80 Nm. After this, retighten all the bolts to the full target tightening torque (80 Nm).
9. Setting the seal (adapting to the flange seal surface) can make it necessary to retighten the bolts. This means that you should retighten the bolts again after a few hours with the flange connection depressurized.

✓ **Filter element changed.**

9 Notes to EU conformity

The devices fall under the purview of the pressure equipment directive 2014/68/EU.

The values stated below do not exceed the limit values in according to article 4, paragraph 1. Therefore, it is designed and manufactured in accordance with valid good engineering practice This pressure devices may not carry a CE marking and an EU declaration of conformity will not be issued.

Designation of the device:	Chlorine Gas Filter
Pressure stage:	PN16
max. temperature:	50 °C
Medium:	Chlorine, fluid group 1

The devices fulfil all the demands made by the directive(s):

2014/68/EU Pressure equipment directive

© Lutz-Jesco GmbH 2014
Subject to technical changes
141028

10 Declaration of harmlessness

Copy the Declaration of harmlessness and complete it separately for each unit. Enclose one copy to the unit you are sending. Please send the Declaration of Conformity to us also in advance per fax or e-mail!

Declaration of no objection

Please fill out a separate form for each appliance!

We forward the following device for repairs:

Device and device type: ..... Part-no.: .....

Order No.: ..... Date of delivery: .....

Reason for repair: .....

.....

.....

Dosing medium

Description: ..... Irritating: ☐ Yes ☐ No

Properties: ..... Corrosive: ☐ Yes ☐ No

We hereby certify, that the product has been cleaned thoroughly inside and outside before returning, that it is free from hazardous material (i.e. chemical, biological, toxic, flammable, and radioactive material) and that the lubricant has been drained.

If the manufacturer finds it necessary to carry out further cleaning work, we accept the charge will be made to us.

We assure that the aforementioned information is correct and complete and that the unit is dispatched according to the legal requirements.

Company / address: ..... Phone: .....

..... Fax: .....

..... Email: .....

Customer No.: ..... Contact person: .....

Date, Signature: .....

© Lutz-Jesco GmbH 2014
Subject to technical changes
141028

11 Warranty application

In the event of a repair, copy the warranty application and complete it separately for each unit. Enclose one copy to the unit you are sending. Please send the warranty application to us also in advance per fax or e-mail!

Warranty Application

Please copy and send it back with the unit!

If the device breaks down within the period of warranty, please return it in a cleaned condition with the complete warranty application, filled out.

Sender

Company: ..... Phone: ..... Date: .....

Address: .....

Contact person: .....

Manufacturer order no.: ..... Date of delivery: .....

Device type: ..... Serial number: .....

Nominal capacity / nominal pressure: .....

Description of fault: .....

.....

.....

.....

.....

.....

.....

.....

Service conditions of the device

Point of use / system designation: .....

.....

.....

Accessories used (suction line etc.): .....

.....

.....

.....

.....

Commissioning (date): .....

Duty period (approx. operating hours): .....

Please describe the specific installation and enclose a simple drawing or picture of the chemical feed system, showing materials of construction, diameters, lengths and heights of suction and discharge lines.

© Lutz-Jesco GmbH 2014
Subject to technical changes
141028

Notes

12 Index

A
Accessories 8, 9
Appropriate and intended use 7

C
Carrying out the leak test with chlorine 14
Carrying out the leak test with nitrogen 14

D
Declaration of Incorporation 18
Dimensions 10
Disposal of old equipment 15
Dosing media
  Prohibited dosing media 7

E
Expert staff 6

F
Flange 8

G
General warnings 5

H
Hazards due to non-compliance with the safety instructions ... 6
Heating sleeve 8

I
Information about chlorine 5
Inspecting the pressure system 14
Inspection intervals 15
Installation 11
Installation examples 12
Installation location 11
Instructions for action
  Identification of instructions for action 4
Intended purpose 7

M
Maintenance 16
Mounting
  Mounting the chlorine gas filter 11
  Mounting the heating sleeve 11

N
Nameplate 9
Notes to the reader 4

O
Operating conditions
  Prohibited operating conditions 7
Operation 14

P
Personal protective equipment 6
Personnel qualification 6
Product description 8
Product warranty 7
  Notes on product warranty 7
Prohibited dosing media 7
Prohibited operating conditions 7
Protective equipment
  Personal protective equipment 6

R
Replacing the filter element 16

S
Safe operation 6
Safety 5
Scope of delivery 8
Shutdown 15
Signal words
  Explanations of signal words 4
Start up 14
Structure of the chlorine gas filter 8

T
Technical data 9
Trained electrician 6
Trained person 6
Troubleshooting 15

W
Warning signs
  Explanations of warning signs 4
Warnings
  General warnings 5
  Identification of warnings 4
Warranty application 20

© Lutz-Jesco GmbH 2014
Subject to technical changes
141028