en

Operating instructions
Chlorine gas vacuum regulator

C 2525-V

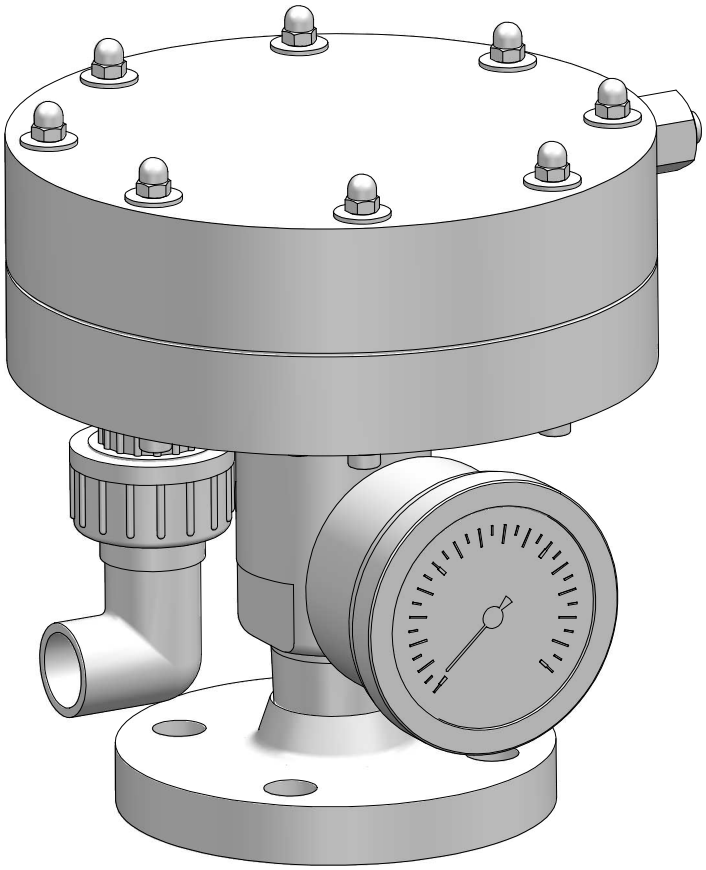

BA-20810-02 / 1 / 05/12/2024

Please read this manual before starting up!

To be retained for future reference.

BA-20810-02 / 1 / 05/12/2024

Table of contents

1 About these operating instructions ... 4
1.1 Target groups ... 4
1.2 General non-discrimination ... 4
1.3 Warnings ... 4
1.4 Action steps ... 5
1.5 Cross-references ... 5
1.6 Latest version ... 5
1.7 Copyright ... 5

2 Safety ... 6
2.1 Dangers when handling chlorine ... 6
2.2 Information about chlorine ... 6
2.3 Product safety ... 7
2.4 Hazards due to non-compliance with the safety instructions ... 7
2.5 Working in a safety-conscious manner ... 7
2.6 Modifications ... 7
2.7 Warranty ... 7
2.8 Obligations of the operating company ... 7
2.9 Personal protective equipment ... 7
2.10 Personnel qualification ... 8
2.10.1 Personnel tasks ... 8

3 Intended use ... 9
3.1 Notes on product warranty ... 9
3.2 Intended purpose ... 9
3.3 Permitted dosing media ... 9
3.4 Foreseeable misuse ... 9

4 Product description ... 10
4.1 Scope of delivery ... 10
4.2 Structure of a vacuum dosing system ... 10
4.3 Structure of the device ... 10
4.4 Function description ... 11
4.5 Rating plate ... 12

5 Technical data ... 13

6 Dimensions ... 14

7 Installation ... 15
7.1 Installation location ... 15
7.2 Mounting position ... 15
7.3 Installation ... 15
7.3.1 Chlorine input (pressure line) ... 15
7.3.2 Chlorine outlet (vacuum line) ... 16
7.3.3 Safety valve ... 17
7.3.4 Completing the installation ... 18
7.4 Installation examples ... 19

8 Commissioning ... 20
8.1 Inspection of the pressure system ... 20
8.1.1 Performing a leak test with nitrogen ... 20
8.1.2 Performing a leak test with chlorine ... 20
8.2 Inspection of the vacuum system ... 21
8.2.1 Performing a leak test of the vacuum system ... 21
8.2.2 Localising leakages in the vacuum system ... 21
8.3 Switching on the system ... 21

9 Operation ... 22
9.1 Inspection intervals ... 22

10 Maintenance ... 23
10.1 Maintenance intervals ... 23
10.2 Maintenance accessories ... 23
10.3 Preparing the system for maintenance ... 23
10.4 Maintenance of the inlet valve ... 23
10.4.1 Dismantling the inlet valve ... 24
10.4.2 Clean the inlet valve ... 24
10.4.3 Fitting the inlet valve ... 24
10.4.4 Checking the inlet valve ... 24
10.5 Maintenance of the vacuum unit ... 25
10.5.1 Dismantling the vacuum unit ... 25
10.5.2 Cleaning the vacuum unit ... 25
10.5.3 Fitting the vacuum unit ... 25
10.5.4 Checking the vacuum unit ... 25
10.6 Completing the maintenance ... 26

11 Troubleshooting ... 27

12 Shutdown and disposal ... 28
12.1 Shutting down the system temporarily ... 28
12.2 Shutting down the system for a longer period of time ... 28
12.3 Disposing of an old device ... 28

13 Note on EU conformity ... 29

14 Decontamination declaration ... 30

15 Warranty claim ... 31

BA-20810-02 / 1 / 05/12/2024

1 About these operating instructions

This document:

- Is part of the product.
- Describes the safe and correct use of the product in all operating phases.
- Must be read completely before the product is commissioned.
- Must be read and applied by every person tasked with working on the product.
- Must be kept for the duration of the service life of the product.
- Must be passed on to any subsequent owner of the product.

1.1 Target groups

Target group	Task
Operator	1. Keep these operating instructions available at the place of use of the product, including for later use. 2. Instruct employees to read and comply with these instructions, especially the safety instructions and warnings. 3. Comply with additional system-related specifications and regulations.
Qualified personnel Trained persons	▶ Read, observe and follow these operating instructions, in particular the safety instructions and warnings.

Table 1: Target groups and their tasks

1.2 General non-discrimination

For better readability, these operating instructions always use the masculine form when referring to persons. However, all genders are addressed equally.

1.3 Warnings

Warnings are intended to help you recognise risks and avoid negative consequences. They are structured as follows in these operating instructions:

Warning sign **SIGNAL WORD**

Type and source of danger

Consequences of non-compliance

▶ A safety precaution to be taken to eliminate the hazard.

Fig. 1: Design of warnings

Signal words

These operating instructions use the following signal words to emphasise the severity of possible injuries if the danger is ignored:

DANGER

Imminent danger

Non-compliance can result in death or serious injury.

WARNING

Possible danger

Non-compliance can lead to death or severe injuries.

CAUTION

Potentially hazardous situation

Non-compliance can result in minor injuries.

NOTE

Potentially hazardous situation

Non-compliance can result in damage to property or malfunctions.

INFORMATION

Information or recommendation

Simplifies handling or extends the service life of the product or system.

Warning signs used

These operating instructions use the following warning signs to indicate the type and source of danger:

Danger to life from chlorine poisoning

General hazard

Risk of machine damage or malfunction

1.4 Action steps

Action steps are structured as follows:

✓ This prerequisite must be met before you can start with the action steps.

▶ Single step

Multiple steps in sequence are structured as follows:

1. First step
2. Second step
   ↳ Intermediate result of a step

⚐ Overall result

1.5 Cross-references

Cross-references are marked with an arrow.

Example: (→ Fig. 5)

1.6 Latest version

Please find the latest version of these operating instructions at www.lutz-jesco.com.

1.7 Copyright

The content of these operating instructions and the images contained in them are subject to the copyright protection of Lutz-Jesco GmbH.

2 Safety

2.1 Dangers when handling chlorine

The following warnings are intended to help you eliminate the dangers that can arise while handling the device. Risk prevention measures always apply regardless of any specific action.

Safety instructions warning against risks arising from specific activities or situations can be found in the respective sub-sections.

DANGER

Danger to life from chlorine poisoning

Chlorine is poisonous. In severe cases, breathing in chlorine may lead to death. It irritates the eyes, the respiratory system and the skin.

- ▶ Use sufficient personal protective equipment.
- ▶ When carrying out any work on the system, use a respirator mask with a Type B gas filter that complies with EN 14387.
- ▶ Always comply with the accident prevention regulations that apply at the place of use.
- ▶ Get rid of leaks without delay. You must eliminate even very minor leaks without delay. Together with the humidity, chlorine forms hydrochloric acid and corrosion results in rapidly increasing leakage.
- ▶ Use only chlorine-resistant seals.
- ▶ Only use seals once. Reusing them leads to leaks.

DANGER

Danger to life from chlorine poisoning

A filter mask is ineffective in the event of a chlorine gas leak. It is not a self-contained breathing apparatus.

- ▶ If chlorine gas escapes, wear a Type 2 self-contained breathing apparatus that complies with EN 137.

DANGER

Danger to life from chlorine poisoning

Chlorine gas systems without gas warning devices constitute an increased safety risk. Chlorine gas leaks cannot be detected in time or at all.

- ▶ Install a gas warning device.

WARNING

Increased risk of accidents due to insufficient qualification of personnel!

Only sufficiently qualified personnel may install, operate and maintain this product and its accessories. Insufficient qualification will increase the risk of accidents.

- ▶ Ensure that all action is taken only by personnel with sufficient and corresponding qualifications.
- ▶ Prevent access to the system for unauthorised persons.
- ▶ Wear personal protective equipment when performing any work on the system.

NOTE

System damage due to formation of hydrochloric acid

Chlorine gas is highly hygroscopic. This means that humidity enters the system at any open connection on devices or pipes, which results in the formation of hydrochloric acid and contamination. Thus inevitably causing damage to the units.

- ▶ Keep all the connections (also in the vacuum system) closed at all times.

2.2 Information about chlorine

Chlorine is a hazardous substance. The chemical element chlorine is a greenish-yellow, toxic gas with a pungent odour that can be detected in the air at concentrations below 1 ppm (= 1 ml/m^3).

Chlorine is 2.5 times heavier than air and accumulates at ground level.

Chlorine is extremely toxic for water organisms. The reason for the toxicity of chlorine is its extraordinary reactivity. It reacts with animal and vegetable tissue and thus destroys it.

Air with a chlorine gas content of 0.5–1 % leads to a quick death in mammals and humans, as it attacks the respiratory tract and the pulmonary alveolus (formation of hydrogen chloride or hydrochloride acid).

NOTE

Faults due to insufficient chlorine quality

Impurities in the chlorine gas form deposits in devices and valves and can attack the components chemically. This can lead to malfunctions.

- ▶ Only use technically pure chlorine that fulfils the following requirements:
  - Chlorine mass content at least 99.5%
  - Water content max. 20 mg/kg
  - Chlorine in accordance with EN 937 fulfils these requirements.

2.3 Product safety

The device is constructed in accordance with the state of the art and recognised safety regulations. Nevertheless, their use may pose a risk to the life and limb of the user or third parties or cause damage to the product and other property. Therefore:

- The product may only be operated if it is in a technically flawless state, in accordance with its intended purpose, in a safety and danger-conscious fashion and in compliance with these operating instructions.
- Keep these operating instructions and all other applicable documents complete, legible and accessible to personnel at all times.
- Refrain from working in any way that could endanger personnel or uninvolved third parties.
- In the event of a safety-relevant fault, take the product out of operation immediately and have the fault rectified by the responsible person.
- In addition to the overall documentation, comply with the statutory or other safety and accident prevention regulations and the applicable standards and directives of the country of operation.

2.4 Hazards due to non-compliance with the safety instructions

Failure to follow the safety instructions may endanger not only persons, but also the environment and the equipment.

The specific consequences can be:

- Failure of important functions of the product and the associated system
- Failure of required maintenance and repair methods
- Danger to persons
- Danger to the environment caused by leaking substances

2.5 Working in a safety-conscious manner

In addition to the safety instructions specified in these operating instructions, you must comply with additional safety regulations:

- Accident prevention regulations
- Safety and operating provisions
- Safety provisions for handling dangerous substances (particularly the safety data sheets of the dosing media)
- Environmental protection provisions
- Applicable standards and legislation

2.6 Modifications

Modifications to the product (such as alterations, changes and structural redesign) are not permitted without the express written consent of the manufacturer. Otherwise, the operating company is liable for the modifications that it makes. Modifications not agreed with the manufacturer may have the following effects, among others:

- Functional impairments of the product
- Damage to the product and other damage to property
- Environmental damage
- Personal injuries right through to death

2.7 Warranty

The following applies within the scope of the warranty:

- During the warranty period, obtain the manufacturer's approval before carrying out any modifications, repair work or alterations.
- Only use original parts.

2.8 Obligations of the operating company

The operator of the product is obligated to:

- Operate the product only in a technically flawless state, in accordance with its intended purpose, in a safety and danger-conscious fashion and in compliance with these operating instructions
- Ensure and monitor intended use
- Comply with and monitor legal and other safety and accident prevention regulations
- Comply with and monitor safety regulations when handling hazardous substances
- Comply with and monitor the applicable standards and directives of the country of operation
- Provide personal protective equipment

2.9 Personal protective equipment

Based on the degree of risk and the type of work you are carrying out, you must use corresponding personal protective equipment. Read the Accident Prevention Regulations and the Safety Data Sheets for the dosing media to find out what protective equipment you need.

The following protective equipment is recommended as a minimum:

Respirator mask

Protective clothing

Protective gloves

Safety shoes

Table 2: Protective equipment required

Wear the protective equipment when performing the following tasks:

- Commissioning
- All work on gas-bearing system parts
- Replacing the supply tanks
- Shut-down
- Maintenance work
- Disposal

2.10 Personnel qualification

Any personnel who work on the product must have special knowledge and skills.

Anybody who works with the product must meet the conditions below:

- Attendance at all the training courses offered by the owner
- Personal suitability for the respective activity
- Sufficient qualification for the respective activity
- Training into the handling of the device
- Knowledge of safety equipment and the way this equipment functions
- Knowledge of these operating instructions, particularly the safety instructions and sections relevant for the activity
- Knowledge of fundamental regulations regarding health and safety and accident prevention

All persons must have one of the following minimum qualifications:

- Trained as a specialist to work independently with the product
- Sufficient training to work on the product under the supervision and guidance of a qualified specialist

These operating instructions differentiate between the following user groups:

Qualified personnel

Thanks to their professional training, knowledge, experience and knowledge of the relevant specifications, qualified personnel are able to perform the job allocated to them and recognise and/or eliminate any possible dangers by themselves.

Trained persons

Trained persons have received training from the operator about the tasks they are to perform and about the dangers stemming from improper behaviour.

Trained persons have attended all trainings offered by the operator.

2.10.1 Personnel tasks

Incorrect handling of the product can cause severe personal injury and damage to property. Therefore, ensure that all work is carried out by qualified personnel only.

The following table shows which qualifications are required for the corresponding activities.

Qualification	Activities
Specialist staff	• Assembly • Installation • Commissioning • Shut-down • Maintenance • Repairs • Disposal • Troubleshooting
Trained persons	• Storage • Transportation • Operation

Table 3: Personnel tasks

3 Intended use

3.1 Notes on product warranty

Any non-designated use of the product can compromise its function or intended protection. This leads to invalidation of any warranty claims!

Please note that liability is on the side of the user in the following cases:

- The product is operated in a manner that is not consistent with these operating instructions, particularly the safety information, action steps and the intended use.
- Information on usage and environment is not adhered to.
- People operate the product who are not adequately qualified to carry out their respective activities.
- No original spare parts or accessories of Lutz-Jesco GmbH are used.
- Unauthorised changes are made to the product by the user.
- The user uses different dosing media than those indicated in the order.
- Maintenance and inspection intervals are not adhered to as required or not adhered to at all.
- The device is commissioned before it or the corresponding system has been correctly and completely installed.
- Safety equipment has been bridged, removed or made inoperative in any other way.

3.2 Intended purpose

The vacuum regulator is intended exclusively for use with chlorine gas dosing systems in accordance with the vacuum procedure. The vacuum regulator is supplied exclusively with gaseous chlorine. It reduces the positive pressure from the chlorine gas supply to a pressure lower than the atmospheric air pressure.

It may only be used with technically pure chlorine with a minimum mass content of 99.5%.

3.3 Permitted dosing media

You may use the device only for the following media and substances:

- Gaseous chlorine
- Technically pure chlorine with a mass content of more than 99.5%

3.4 Foreseeable misuse

The following section provides information regarding the device applications which are classified as non-intended use. This section is intended to allow you to detect possible misuse in advance and to avoid it.

Foreseeable misuse is assigned to the individual stages of the product lifetime:

Incorrect assembly

- Use of old or unsuitable seals on the connections
- Inadequate attachment of the components
- Unauthorised modification of the device

Incorrect commissioning

- Commissioning of a damaged or incorrectly fitted device
- Commissioning by untrained personnel
- Commissioning without correctly functioning safety and protective equipment (e.g. a gas warning device)

Incorrect operation

- No leak test after maintenance and servicing work

Incorrect maintenance

- Maintenance and repair work is carried out while the system is still running
- Failure to comply with the instructions during maintenance
- Use of unsuitable spare parts
- Use of incorrect disassembly tools

Incorrect disposal

- No proper disposal of device components and of replacement parts

4 Product description

4.1 Scope of delivery

Carefully check the delivery prior to installation and refer to the delivery note to ensure that the delivery is complete and to check for any transport damage. Contact the supplier and/or carrier regarding any questions concerning the delivery and/or transport damage. Do not operate defective products.

The scope of delivery includes:

- Vacuum regulator with inlet valve and integrated safety valve
- Pressure gauge (optional)
- Flange connection at the chlorine gas inlet including screws and seal (optional)
- 5 m hose with fastening material as a blow-off line
- Ammonia solution for leakage test
- Operating instructions

4.2 Structure of a vacuum dosing system

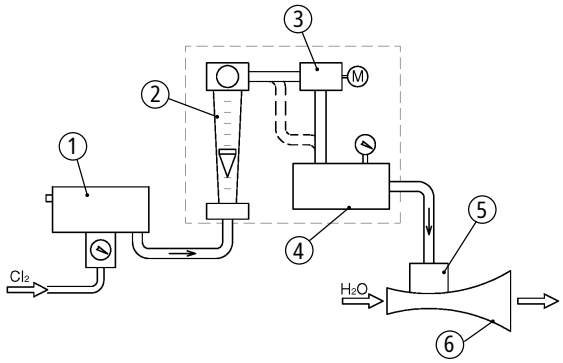

Fig. 2: Structure of a vacuum dosing system

The chlorine gas leaves the chlorine tank with positive pressure. The vacuum regulator (1) only permits the chlorine to flow if a vacuum at the output of the device generates suction. A chlorine leak is not possible following a line fracture behind the vacuum regulator.

The dosing device consists of a flow meter (2) with a manual regulation valve, frequently also an electrically-actuated regulation valve (3) and a pressure regulator (4).

The ejector (6) generates the vacuum in accordance with the Venturi effect and mixes the chlorine gas in the motive water flow. Chlorine dosing is aborted immediately following water stand still. The non-return valve (5) prevents water from entering the dosing devices.

4.3 Structure of the device

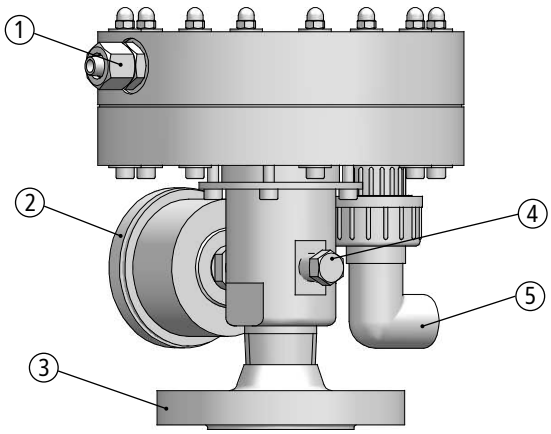

Fig. 3: Structure of the device

1	Safety valve outlet	2	Pressure gauge (optional)
3	Input	4	Plugs
5	Output		

4.4 Function description

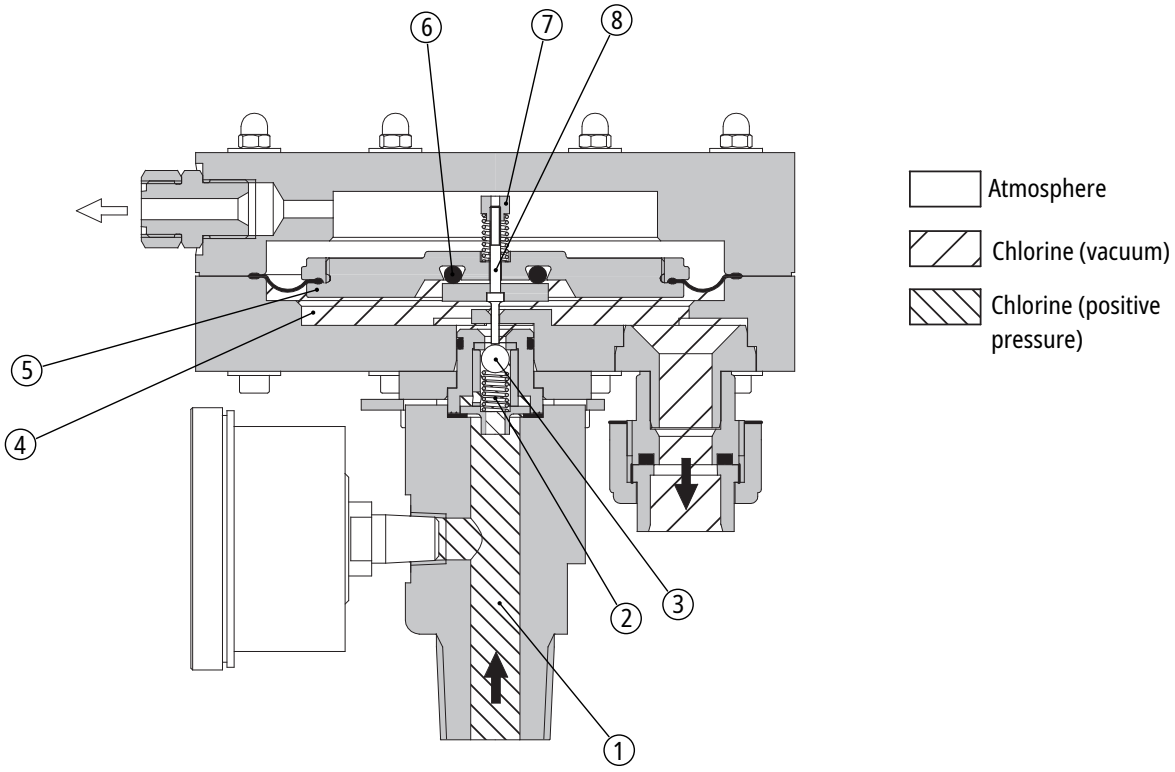

Fig. 4: Sectional view of the chlorine gas vacuum regulator C 2525-V

Chlorine gas flows under pressure out of the chlorine drum into the vacuum regulator. The vacuum regulator consists of an inlet valve (1) and the diaphragm chamber (4). The chlorine gas in the inlet valve is under positive pressure; a vacuum is in the diaphragm chamber.

The PVC output of the vacuum regulator is connected to the ejector. Sufficient vacuum sucks the diaphragm disc (5) downwards, which causes the valve rod (8) to push the valve ball (3) downwards out of the valve seat against the force of the spring (2). The inlet valve opens and the required amount of chlorine flows into the diaphragm chamber (4). If the vacuum is too weak, the spring closes the system again. This produces a constant vacuum in the subsequent piping.

A constant vacuum ensures the highest safety standard for the system: In the event of a leakage, the ambient air is sucked into the pipe without a dangerous amount of chlorine gas being able to escape into the atmosphere.

If the valve ball fails to close completely due to significant contamination, slight excess pressure develops in the diaphragm chamber. In the event of this malfunction, the integrated safety valve opens: The diaphragm disc (5) lifts off the O-ring (6) and compresses the spring (7). This opens a flow channel in the diaphragm mount and vents the system to a neutralisation system, such as a chlorine eliminator or an activated carbon cartridge.

4.5 Rating plate

The rating plate clearly identifies the product and provides important information such as the manufacturer, product designation, year of manufacture and technical and safety-relevant data. The rating plate must be kept legible for the duration of the service life of the product.

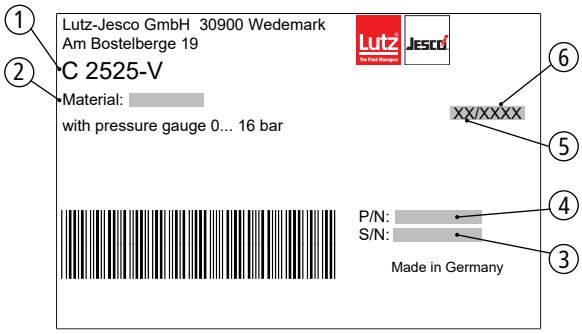

Fig. 5: Rating plate C 2525-V

1	Product name	2	Materials
3	Serial number	4	Part number
5	Month of manufacture	6	Year of manufacture

5 Technical data

Description		Value
Throughput		up to 25 kg/h
Inlet pressure		1.5–16 bar
Operating vacuum		-50 to -100 mbar
Opening pressure of the safety valve		50 mbar
Pressure gauge (optional)		0–16 bar / Ø 63 mm
Materials	Inlet valve	Brass (chemically nickel-plated), Monel, Hastelloy
	Diaphragms	FPM
	Vacuum housing	PVC
	Seals	FPM, PTFE
Weight with flange and manometer		approx. 6 kg
Ambient temperature		10–50°C (avoid direct sunlight)

Table 4: Technical data

6 Dimensions

All dimensions in millimetres (mm).

Scale	Value
A	107
B	134.5
C	27
Ø D	20

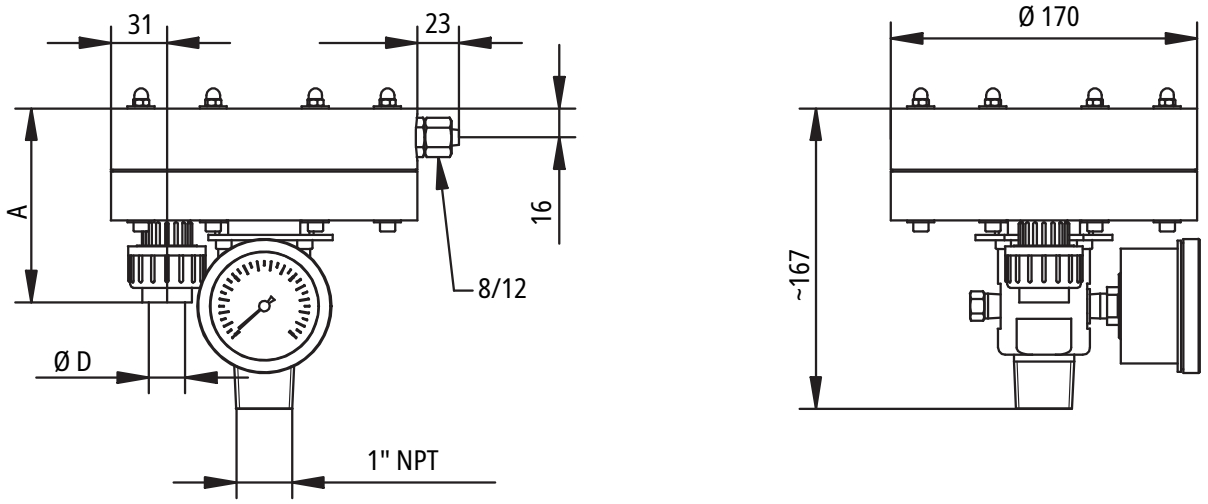

Fig. 6: Dimensions C 2525-V with threaded connection

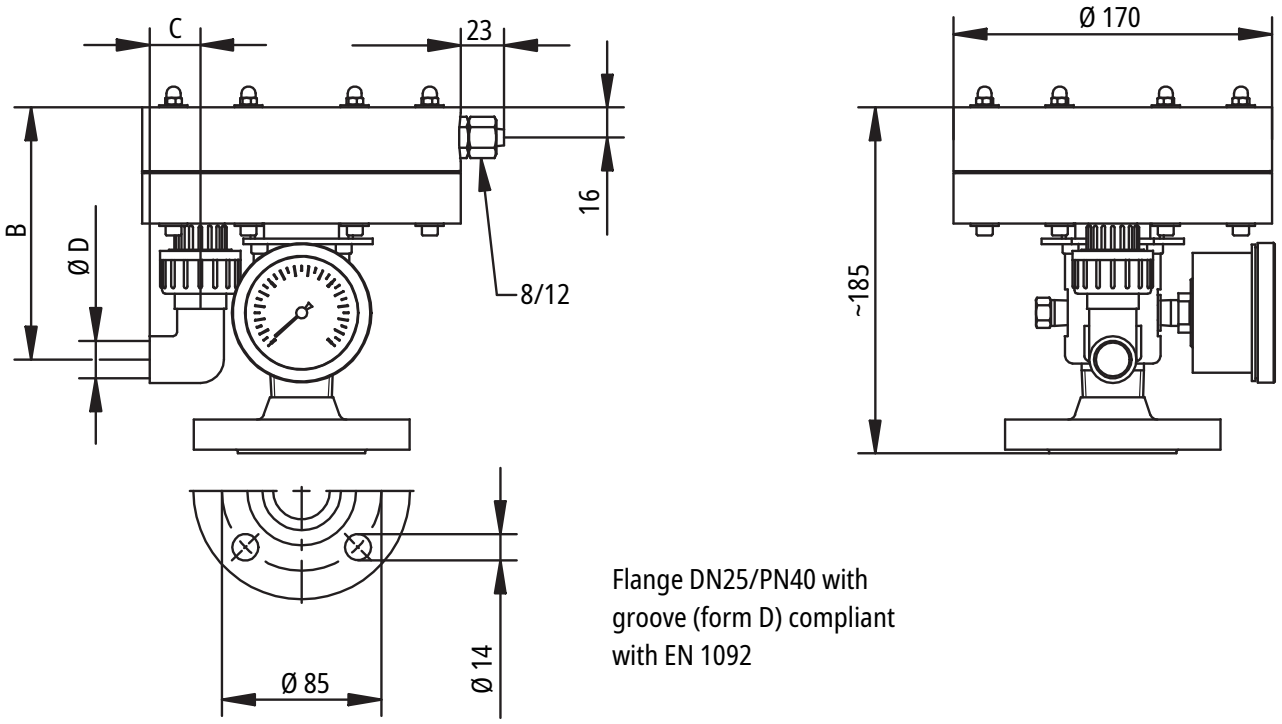

Flange DN25/PN40 with groove (form D) compliant with EN 1092

Fig. 7: Dimensions C 2525-V with flange connection

7 Installation

DANGER

Increased risk of accidents due to insufficient qualification of personnel!

Only sufficiently qualified personnel may install, operate and maintain the device and its accessories. Insufficient qualification will increase the risk of accidents.

- ▶ Ensure that all action is taken only by personnel with sufficient and corresponding qualifications.
- ▶ Prevent access to the system for unauthorised persons.

NOTE

Damage to the system due to incorrect installation

The failure to observe installation instructions (e.g. use of unsuitable tools, incorrect torque) can damage the system parts.

- ▶ Only apply the appropriate amount of force to the plastic parts. Plastic threads (especially PVC threads) can be tightened and loosened more easily by applying a thin layer of amount of silicone grease or PRFE grease.
- ▶ Note the specified torque.

7.1 Installation location

Based on the flow direction of the chlorine, the vacuum regulator is the last device in the installation that is operated with positive pressure. The vacuum regulator must therefore be installed in the chlorine supply room, which is monitored by a gas warning device.

All devices and lines following in the direction of flow have negative pressure relative to the atmosphere. These devices are usually installed in the dosing device room.

The device may not be exposed to direct sunlight.

7.2 Mounting position

The device input must point downward.

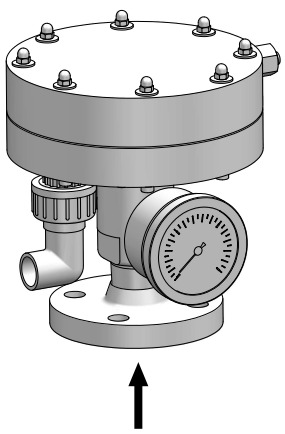

Fig. 8: Mounting position

7.3 Installation

7.3.1 Chlorine input (pressure line)

NOTE

Damage to the system by liquid chlorine

The vacuum regulator is only suited for gaseous chlorine. Liquid chlorine destroys PVC parts:

- ▶ Install a chlorine evaporator upstream of the vacuum regulator if supplying liquid chlorine. An additional pressure reducer prevents the chlorine gas from condensing in the installation downstream of the chlorine evaporator.
- ▶ For systems without a pressure-relief valve, the highest temperature in the line must be directly upstream of the vacuum regulator. You can achieve this by heating the line directly in front of the inlet valve with a heating collar or by fitting the entire pipe line with a heating tape. This prevents condensation of chlorine gas.
- ▶ Install a moisture eliminator with a heating collar at the input to the vacuum regulator, in order to evaporate small residual amounts of liquid chlorine.

Install the vacuum regulator directly on the supply line. It can be supported by the line and therefore does not need to be secured separately. However, you must secure the line sufficiently.

Lay the line from the chlorine drum to the vacuum regulator on a continuously rising gradient. Install a shutoff valve in front of every vacuum regulator.

To ensure that the vacuum regulator can be supplied with sufficient pressure, the pressure loss in the pressure line from the pressure tank to the vacuum regulator should not exceed 0.5 bar. Therefore, use seamless pipes with a nominal width of DN25 (1").

With very long lines (> 200 m) or if several vacuum regulators are connected to a single supply line, you need to use a supply line with a larger nominal width.

7.3.1.1 Installing a flange connection

- ✓ The inside of the supply line is clean and dry.
- ✓ The transport protection was removed.
- ✓ The sealing surfaces are free of contamination and damage.
- ✓ Seals must be clean, undamaged and dry.
- ✓ Bolts, nuts and washers are clean and undamaged. Lubricate the sliding faces and thread of bolts, nuts and washers e.g. using fitting grease or PTFE grease.
- ✓ Required equipment 🛠 is to hand: Fitting grease (e.g. Molykote Longterm W2) and flat gasket

INFORMATION

During installation work, you must replace removed screws, nuts and washers if they are damaged. You may only install used screws, nuts and washers if they are as good as new.

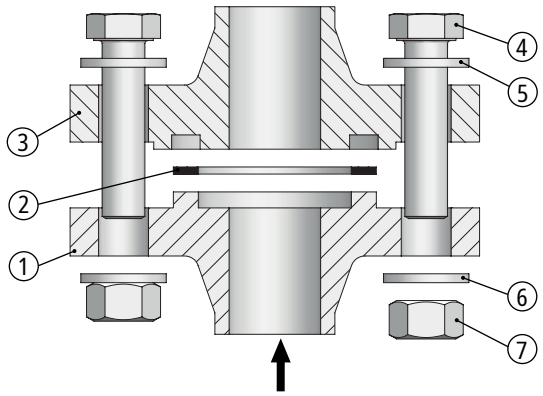

Fig. 9: Installing the flange connection

1. Place the flat gasket (2) onto the protruding spring of the connecting flange (1). Assemble the seal in dry condition.
2. Fit the grooved flange (3) of the vacuum regulator. Make sure that the flat gasket does not slip.
3. Fit the bolts (4), washers (5, 6) and nuts (7) by hand.
4. Tighten the bolts evenly alternately crosswise in three stages: 20 Nm, 35 Nm, 50 Nm. After this, retighten all the bolts to the full target tightening torque (50 Nm).
5. Setting the seal (adapting to the flange seal surface) can make it necessary to retighten the bolts. For this reason, retighten the bolts to 50 Nm after a few hours.

⚐ Chlorine input with flange connection installed.

7.3.1.2 Installing a threaded connection

DANGER

Danger to life from chlorine poisoning!

Pipe connections and fittings in pressurized lines must be sealed with chlorine-resistant substances. Unsuitable sealants react with the chlorine and lead to leakages.

▶ Use only sealants that are resistant in contact with chlorine (e.g. anaerobic sealants).

✓ The inside of the supply line is clean and dry.

✓ The transport protection was removed.

✓ The threads are metallic bright.

✓ Required equipment 🛠 is to hand: grease-dissolving cleaner (e.g. isopropyl alcohol) and thread sealant (Omnifit FD20)

1. Clean the thread with a fat-dissolving cleaning agent.
2. Allow the thread to dry completely.
3. Apply the thread sealant to the external thread in a circular motion to the start of the thread. Leave the first thread clear. Apply the thread sealant all the way down to the root of the thread to thoroughly grease the thread flank.

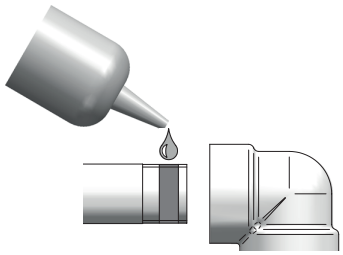

Fig. 10: Seal in the thread

NOTE

Leakage due to incorrect installation

To ensure that the connection is correctly aligned, it is necessary under certain circumstances to turn the thread anticlockwise. Loosening the connection can cause bubbles to form and lead to leakages.

▶ Only turn the thread anti-clockwise.

▶ If the orientation is not correct after the connection has been tightened, repeat steps 1 – 5.

4. Insert the threaded pin into the internal thread and apply a little thread sealant to the internal thread. Screw the parts by hand.
5. Use a tool to tighten the connection. The tool may only grip the metal inlet valve, not the PVC part of the vacuum regulator. The thread size 1" NPT requires approx. 150 Nm.
6. Remove excess thread sealant with a cloth.
7. Allow the bond to harden for at least 12 hours prior to the leak test.

⚐ The chlorine input with a threaded connection has been assembled.

INFORMATION

If the pressure gauge on the inlet valve is pointing in the wrong direction after the chlorine supply has been installed, the pressure gauge can be fitted on the opposite side. To do so, swap the pressure gauge and the threaded plug. They are fitted with PTFE strips.

7.3.2 Chlorine outlet (vacuum line)

PVC-U pipes must be used as vacuum lines. With short distances, select the pipe in the nominal width of the vacuum connection and use a larger pipe for long distances. If you want to connect several devices to a single line, you must calculate the line for the entire chlorine flow.

The following nominal widths are recommended for the vacuum line (pressure loss max. 25 bar, calculated at 0.9 bar with 5 x 90° angles):

Mass flow of chlorine	Length of the vacuum line					
	5 m	10 m	20 m	30 m	50 m	100 m
5 kg/h	DN15	DN15	DN15	DN15	DN15	DN15
10 kg/h	DN15	DN15	DN15	DN15	DN15	DN15
15 kg/h	DN15	DN15	DN15	DN15	DN15	DN15

Mass flow of chlorine	Length of the vacuum line					
	5 m	10 m	20 m	30 m	50 m	100 m
20 kg/h	DN15	DN15	DN15	DN15	DN15	DN20
25 kg/h	DN15	DN15	DN15	DN15	DN20	DN20

Table 5: Recommended nominal widths for the vacuum line

Where necessary, a long distance can be bridged with pipes of a large nominal width; for shorter sections shortly before or after the devices, select a connection in the nominal width of the devices:

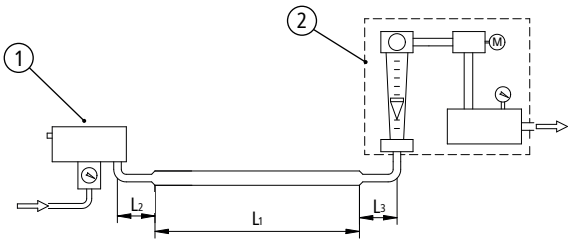

1	Vacuum regulator	2	Dosing device
L_2	Line connected to the vacuum regulator with approx. 0.5 m in the connection nominal width	L_1	Large distance in a larger nominal width
L_3	Line connected to the dosing device with approx. 0.5 m in the connection nominal width		

Fig. 11: Long vacuum line

7.3.2.1 Installing the vacuum line

- ✓ The chlorine input of the vacuum regulator has been installed.
- ✓ The vacuum line is fixed with sufficient pipe clips and meets the output of the vacuum regulator free of stress.
- ✓ All parts are clean and dry.
- ✓ The transport protection of vacuum regulator output has been removed.
- ✓ Required equipment 🛠 is to hand: PVC adhesive

1. Cut the PVC pipe at right angles. Make a chamfer on the pipe exterior (approx. 3 mm x 20°).
2. Clean the pipe and the bushing with the cleaning agent recommended by the manufacturer of the adhesive.
3. Glue the pipe in the connection. Follow the instructions for the PVC adhesive.

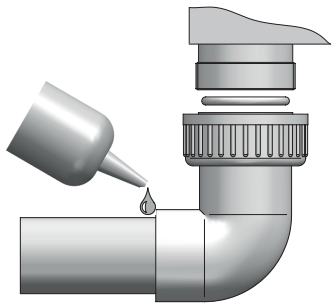

Fig. 12: Fit the chlorine outlet

4. Mount the connection on the device. Ensure that the O-ring is installed.
5. Tighten the union nut by hand.
6. Allow the bond to harden for at least 3 hours prior to the leak test.

⚐ Vacuum line installed.

7.3.3 Safety valve

A hose serves as a blow-off line, the open end of which should end in proximity to the gas sensor. We recommend fitting an activated carbon cartridge on the open end of the hose as this will avoid alarms due to brief pressure pulses caused by the system.

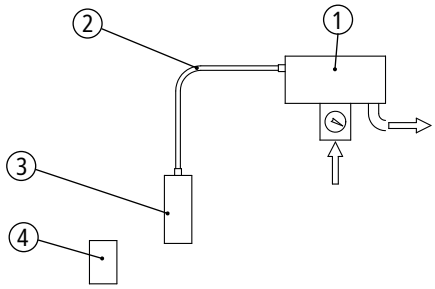

Fig. 13: blow-off line

1	Vacuum regulator	2	blow-off line
3	Activated carbon cartridge	4	Gas sensor

INFORMATION

A transparent PVC hose is ideally suitable for use as a blow-off line. It turns milky as soon as it comes into contact with chlorine and thus makes faults recognisable at an early stage.

7.3.3.1 Fitting the blow-off line

- ✓ The chlorine input of the vacuum regulator has been fitted.
- ✓ The chlorine output of the vacuum regulator has been fitted.
- ✓ The transport protection on the safety valve has been removed.

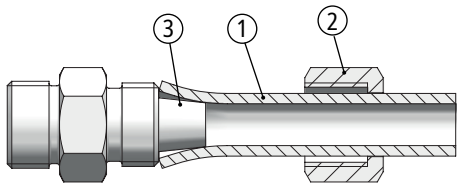

Fig. 14: Fitting the hose connection

1. Cut the hose (1) a at right angles.
2. Slide the union nut (2) onto the hose.
3. Slide the hose end onto the cone of the hose connection (3).
4. Tighten the union nut by hand.
5. Fix the hose to the wall.
6. If necessary, fit the activated carbon cartridge on the open end of the hose.

⚐ Blow-off line installed.

7.3.4 Completing the installation

After completing installation, you must check all connections for leak-tightness.

→ Inspection of the pressure system [▶ 20] and Inspection of the vacuum system [▶ 21]

INFORMATION

All exposed bright metal surfaces must be painted as the atmosphere in chlorine gas rooms is highly corrosive. RAL1003 yellow 2-component epoxy resin paint, for example, is suitable. Paint must only be applied after a successful leak test has been completed.

7.4 Installation examples

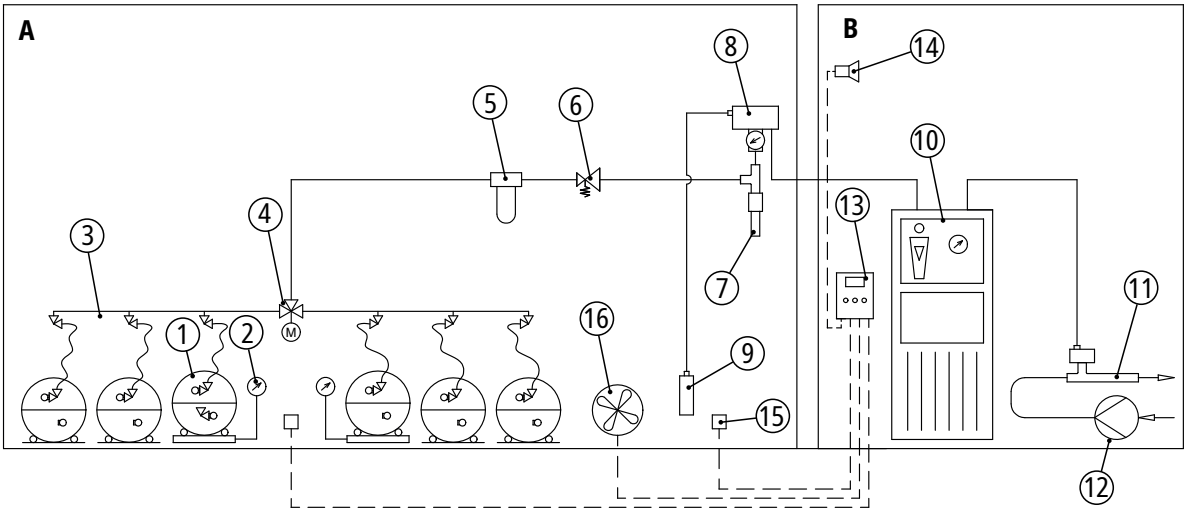

Fig. 15: Installation without a chlorine evaporator

A	Room for the chlorine supply	B	Dosing device room
1	Chlorine barrel	2	Chlorine barrel scale
3	Manifold	4	Changeover switch
5	Chlorine gas filter	6	Pressure reducing valve
7	Moisture eliminator with heating collar	8	Vacuum regulator
9	Activated carbon cartridge	10	Dosing device
11	Ejector with non-return valve	12	Motive water pump
13	Gas warning device	14	Horn
15	Gas sensor	16	Entrance port of the chlorine eliminator

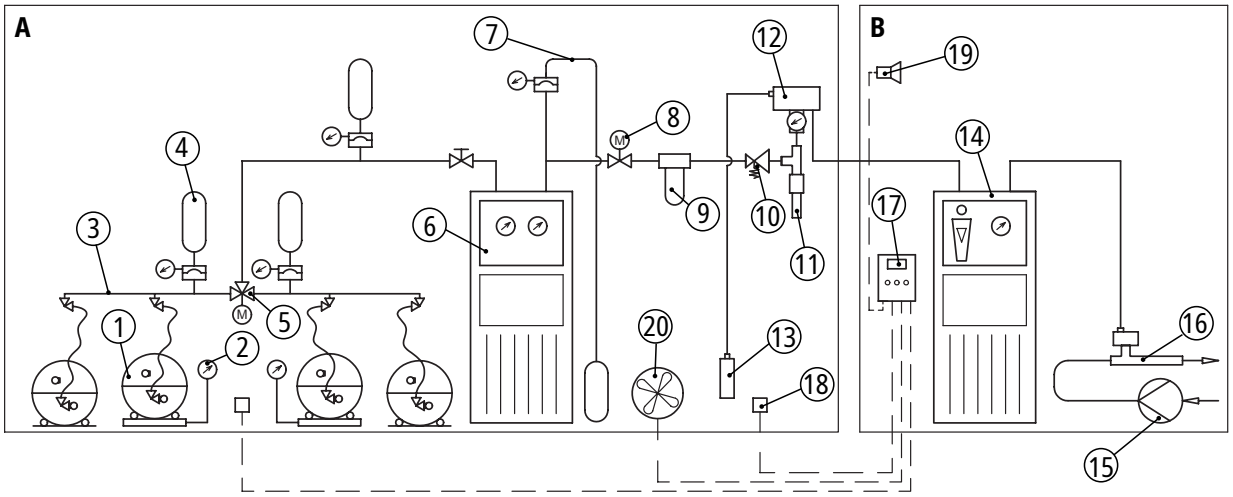

Fig. 16: Installation with a chlorine evaporator

A	Room for the chlorine supply	B	Dosing device room
1	Chlorine barrel	2	Chlorine barrel scale
3	Manifold	4	Rupture disk with expansion container
5	Changeover switch	6	Chlorine evaporator
7	Rupture disk with safety valve	8	Quick-action valve
9	Chlorine gas filter	10	Pressure reducing valve
11	Moisture eliminator with heating collar	12	Vacuum regulator
13	Activated carbon cartridge	14	Dosing device
15	Motive water pump	16	Ejector with non-return valve
17	Gas warning device	18	Gas sensor
19	Horn	20	Entrance port of the chlorine eliminator

8 Commissioning

DANGER

Chlorine gas can escape due to systems that are leaky or not installed correctly!

Chlorinators constitute an increased safety risk if they have not been properly installed, if an adequate leak test has not been performed or if the devices are not in good condition.

- ▶ Before you put the system into operation, have it checked by technical personnel to ensure that it is in proper condition and leak tight.
- ▶ The condition of the installation must be checked for adequate tightness on a regular basis.
- ▶ Ensure that all action is taken only by personnel with sufficient and corresponding qualifications.

8.1 Inspection of the pressure system

To check the pressure system from the chlorine tank to the vacuum regulator for leak-tightness, first perform a leak test with nitrogen and then a leak test with chlorine.

8.1.1 Performing a leak test with nitrogen

INFORMATION

You are strongly recommended to carry out this inspection before carrying out the leak test with chlorine, since it shows leaks in the pressure system without the risk of chlorine escaping.

As an alternative, you can perform the inspection using dry compressed air.

- ✓ All the open connections of the pressure system were closed correctly.
- ✓ All the shut-off valves in the pipe system were opened.
- ✓ A nitrogen cylinder was connected.

1. Slowly raise the system pressure at the nitrogen cylinder's pressure reducer to 10 bar.
2. Close the nitrogen cylinder's valve.
3. Apply soap solution to all the potential leaks. Bubbles will appear at leak locations.
4. Close the outlet on the nitrogen cylinder's pressure reducer and observe the pressure gauge in the installation. The pressure must not drop within one hour.
5. If necessary, repair leaks and repeat the leak test.

⚐ Leak test with nitrogen carried out.

8.1.2 Performing a leak test with chlorine

DANGER

Danger to life from chlorine poisoning!

If you start the leak test with chlorine before the entire system has been installed and the ejectors are ready for operation, chlorine cannot be extracted immediately in the case of a leakage.

- ▶ Make sure that all system components have been installed correctly and the ejectors are ready for operation before starting the leak test with chlorine.
- ▶ Put on protective clothing before carrying out the leak test with chlorine.

- ✓ The leak test with nitrogen has been carried out successfully.
- ✓ All the open connections of the pressure system were closed correctly.
- ✓ A chlorine container was connected.
- ✓ The ejector is ready for operation.

1. Briefly open the chlorine container valve and close it again.
2. Carry out the ammonia test on the entire pressure system: Ammonia steam with chlorine forms a white vapour and makes even very small leaks visible. Hold an open bottle containing the ammonia solution close to the pipe and make slight pumping motions with the plastic bottle.

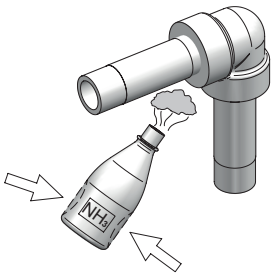

Fig. 17: Leak test with ammonia

NOTE

Damage to the system from ammonia solution

If the ammonia solution comes into contact with the system, this leads to corrosion on the equipment.

- ▶ Make sure that you do not spill any ammonia.

3. If you find leaks: Use the ejector to extract the chlorine immediately. Eliminate the leak and repeat the leak test.
4. If you do not find any leaks: Briefly open the chlorine container valve and leave it open.
5. Carry out the leak test again.
6. Close the chlorine tank valve and extract the chlorine using the ejector.

⚐ Leak test with chlorine carried out.

8.2 Inspection of the vacuum system

NOTE

Operating faults through leakages in the vacuum system

Small leaks in the vacuum system will not be recognised in normal operation, since no chlorine escapes. Air will enter the system with moisture. The moisture can combine with the chlorine to create deposits and operating malfunctions.

With the ejector switched off, there may be a slight chlorine smell.

▶ Check the vacuum system.

▶ Ensure that all action is taken only by personnel with sufficient and corresponding qualifications.

8.2.1 Performing a leak test of the vacuum system

✓ Tightness of the vacuum system is inspected together with the dosing unit.

✓ The vacuum system is fully assembled.

✓ All the open connections of the vacuum system were closed.

✓ The ejector is ready for operation.

1. Connect the chlorine supply e.g. to the chlorine tank valves or a valve in the vacuum regulator supply line.
2. Open the valve on the dosing device to adjust the dosing quantity.
3. Switch on the ejector and wait until the vacuum manometer on the dosing unit displays at least 0.5 bar underpressure.
4. Switch off the ejector.
   ↳ The vacuum must stay unchanged for at least five minutes.
5. If the vacuum collapses quickly, eliminate the leak (→ Localising leakages in the vacuum system [▸ 21]) and inspect the vacuum system again.

⚐ A leak test was performed in the vacuum system.

8.2.2 Localising leakages in the vacuum system

You can localise leaks in the vacuum system using compressed air or nitrogen with a slight positive pressure and soap solution.

NOTE

System damage due to excessive pressure

When using positive pressure to localise leaks, take into account that components in the vacuum system, e.g. diaphragms or springs, may be mechanically overloaded.

▶ Use a maximum positive pressure of 0.5 bar.

✓ A leak was detected in the vacuum system.

✓ The vacuum system is fully assembled.

✓ All the open connections of the vacuum system were closed correctly.

✓ The valves on the chlorine supply have been closed.

✓ If the system was previously operated with chlorine, the residual chlorine has been extracted with the ejector and the system operated for approx. 5 minutes using nitrogen or dry compressed air.

✓ The ejector has been switched off.

1. Close the water valves upstream and downstream of the ejector.
2. Connect the supply of nitrogen or dry compressed air to the vacuum system.
3. Slowly increase the system pressure to approx. 0.2 – 0.4 bar (at significantly higher positive pressures, the safety valve in the vacuum regulator will open).
4. Apply soap solution to all the potential leaks.
5. Bubbles will appear at leak locations.

⚐ Leakage in the vacuum system localised

8.3 Switching on the system

The vacuum regulator does not require any special operation. If there is sufficient vacuum and sufficient chlorine supply, the device opens and if the vacuum is too low, it stops the chlorine gas flow.

9 Operation

DANGER

Chlorine gas can escape due to systems that are leaky or not installed correctly!

Chlorinators constitute an increased safety risk if they have not been properly installed, if an adequate leak test has not been performed or if the devices are not in good condition.

- ▶ Before you put the system into operation, have it checked by technical personnel to ensure that it is in proper condition and leak tight.
- ▶ The condition of the installation must be checked for adequate tightness on a regular basis.
- ▶ Ensure that all action is taken only by personnel with sufficient and corresponding qualifications.

The vacuum regulator does not require any special operation. The device opens given a sufficient vacuum and sufficient chlorine supply. If the vacuum is interrupted, it stops the chlorine gas flow.

INFORMATION

The vacuum regulator can vibrate under certain circumstances

If the combination of supply pressure, pipe length and dosing quantity is not optimal, the vacuum regulator can vibrate.

- ▶ Adjust the inlet pressure or slightly close the stop valve in front of the vacuum regulator.

9.1 Inspection intervals

Inspect the components of the chlorine gas system for leak-tightness on a daily basis or after maintenance or repair work.

10 Maintenance

WARNING

Increased risk of accidents due to insufficient qualification of personnel!

Only sufficiently qualified personnel may install, operate and maintain this product and its accessories. Insufficient qualification will increase the risk of accidents.

- ▶ Ensure that all action is taken only by personnel with sufficient and corresponding qualifications.
- ▶ Prevent access to the system for unauthorised persons.
- ▶ Wear personal protective equipment when performing any work on the system.

10.1 Maintenance intervals

To avoid hazardous incidents, chlorinators must be regularly maintained. We recommend the following maintenance intervals:

Interval	Maintenance
After 1 year	Minor maintenance: • Clean the device thoroughly • Replace inlet valve seals subjected to high loads
After 3 years	Major maintenance: • Replace all elastomers • Replace the ball guide and spring of the inlet valve
After 5 years	• Replace the pressure gauge

Table 6: Maintenance intervals

INFORMATION

In some cases, regional regulations may require shorter maintenance intervals.

Maintenance intervals depend only on how frequently the equipment is used. Chemical wear of rubber parts, for example, begins with the initial medium contact and continues irrespective of the usage.

10.2 Maintenance accessories

You will need the following accessories for maintenance:

- Silicone grease (medium viscosity) for rubbing into the seals
- Assembly paste for lubricating the sliding surfaces and threads
- Liquid sealant for gluing in 1" NPT threads
- Ammonia solution for the leak test
- Plastic tool for dismantling O-rings

10.3 Preparing the system for maintenance

DANGER

Danger to life from chlorine poisoning!

Do not carry out maintenance or any other work on the chlorinator until the system has been decommissioned and all of the chlorine gas has been removed from the lines. Otherwise, chlorine gas may escape.

- ▶ Proceed in accordance with the following instructions.

1. Close the chlorine tank valves.
2. Use the ejector to extract the remaining chlorine.
3. Run the chlorinator for approximately five minutes with nitrogen or dry compressed air.
4. Switch off the ejector.
5. Close all the connections to protect the lines and devices from humidity and dirt.

⚐ The system is prepared for maintenance.

10.4 Maintenance of the inlet valve

Before you perform maintenance on the inlet valve, the following requirements must be met:

- The system has been prepared for maintenance.
- A maintenance set is available.

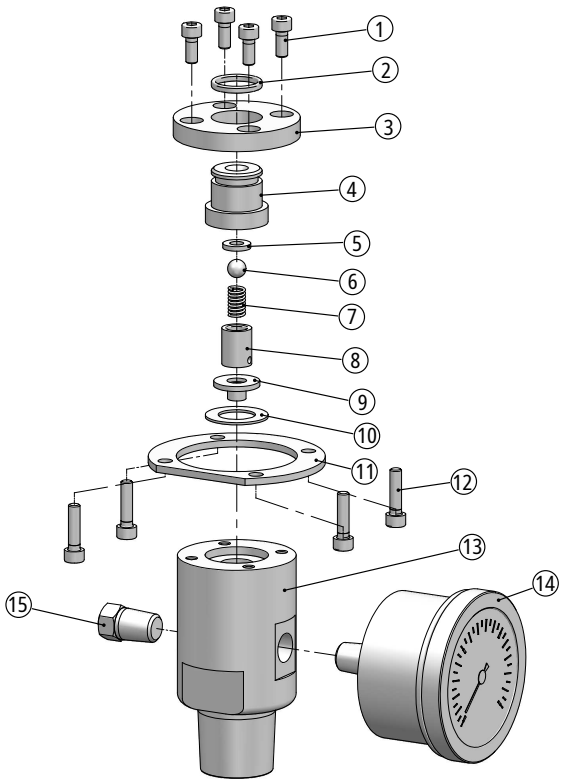

Fig. 18: Exploded view of the inlet valve

10.4.1 Dismantling the inlet valve

1. Remove the four screws (12) that secure the flange (11) to the plastic part of the vacuum regulator.
2. Pull out the inlet valve from the plastic part with a turning movement.
3. Remove the O-ring (2).
4. Loosen the four screws (1).
   ↳ The spring (7) presses the valve apart.
5. Lift the clamping ring (3) off the valve cap (4) and the clamping plate (11).
6. Remove the valve cap together with the components (5 to 10) from the valve body (13).
7. If you want to clean the valve with water, unscrew and remove the pressure gauge (14). Seal the pressure gauge to prevent any ingress of air humidity.

⚐ Inlet valve dismantled.

10.4.2 Clean the inlet valve

1. Thoroughly clean all parts that are not replaced. Warm water or isopropyl alcohol is suitable for this purpose. The pressure gauge must not be immersed in water!
2. Perform a visual inspection of the parts that are not included in the maintenance set and replace any damaged parts.

⚐ Inlet valve cleaned.

10.4.3 Fitting the inlet valve

✓ The parts have been dried well after cleaning.

✓ The parts are in good condition.

✓ Wearing parts are available.

1. Insert the valve cap (4) through the clamping ring (3).
2. Grease the O-ring (2) lightly with silicone grease and insert it into the nut of the valve cap.
3. Insert the seal (10) into the hole of the valve body (13).
4. Place the clamping plate (11) on the valve body.
5. Fit the valve seat (5) into the valve cap.
6. Insert the ball guide (8) into the valve cap.
7. Insert the valve ball (6) into the ball guide and place the spring (7) on the ball.
8. Place the spring disc (9) on the spring with the pin facing upwards. The spring centres itself in the cylindrical recess of the spring plate.
9. Press the spring disc lightly into the cylindrical recess of the valve cap until the disc touches the ball guide.
10. Hold the spring disc in this position and place the valve cap on the seal (10). Make sure that the clamping plate (11) does not slip.
11. Press the clamping ring (3) onto the clamping plate and loosely fit the screws (1) to the valve body (13) using some assembly paste.
12. Align the clamping plate so that the pressure gauge is correctly aligned on the plastic part after the inlet valve is installed.
13. Tighten the screws crosswise with approx. 3 Nm.
14. Fit the pressure gauge (14) with approx. 3 layers of PTFE strip.

⚐ Inlet valve fitted.

INFORMATION

Refit the inlet valve on the vacuum unit only after you have checked it for leaks and have performed maintenance of the vacuum unit.

10.4.4 Checking the inlet valve

✓ The valve is fully fitted.

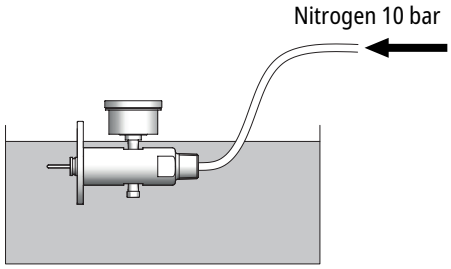

Fig. 19: Checking the inlet valve

1. Connect nitrogen or dry compressed air to the valve input and set the pressure to approx. 10 bar.
2. Push the inlet valve under water. The pressure gauge must not be immersed in water!

INFORMATION

If it is not possible to immerse the inlet valve, you can also use soapy water for the test. Apply a thin layer with a brush, for example.

3. Observe the valve for a few minutes. No bubbles may rise.
4. If a leakage develops on the valve output, remove the valve from the water, open the valve by exerting strong pressure on the valve rod and repeat the test. If it is not yet tight, the valve seat or the valve cone must be replaced.
5. Allow the inlet valve to dry well before fitting it.

⚐ Inlet valve checked.

10.5 Maintenance of the vacuum unit

Before maintenance is performed on the vacuum unit, the following requirements must be met:

- The chlorine gas system has been prepared for maintenance (→ Preparing the system for maintenance [▶ 23]).
- A maintenance set is available.
- The inlet valve has been removed.

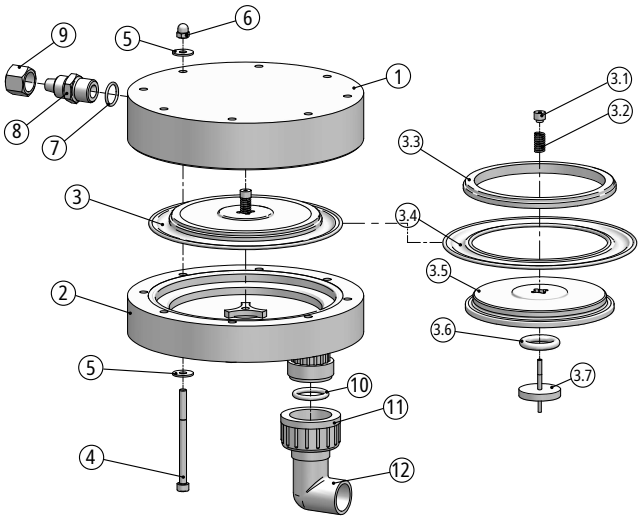

Fig. 20: Exploded view of the vacuum unit

10.5.1 Dismantling the vacuum unit

1. Loosen and remove the screws (4 – 6).
2. Remove the diaphragm disc (3) from the device.
3. Remove the O-rings (7, 10).
4. Remove the clamping ring (3.3) and remove the diaphragm (3.4).
5. Loosen the round nut (3.1) from the valve rod (3.7) and pull the valve rod downwards out of the diaphragm disc (3.5).
6. Remove the O-ring (3.6).

⚐ Vacuum unit dismantled.

10.5.2 Cleaning the vacuum unit

1. Thoroughly clean all parts that are not replaced. Warm water or isopropyl alcohol is suitable for this purpose.
2. Perform a visual inspection of the parts that are not included in the maintenance set and replace any damaged parts. Pay particular attention to the contours for the diaphragm (3.4) on the clamping ring (3.3) and on the housing (1, 2).

⚐ Vacuum unit cleaned.

10.5.3 Fitting the vacuum unit

✓ The parts have been dried well after cleaning.

✓ The parts are in good condition.

✓ Wearing parts are available.

1. Rub the edges of the diaphragm (3.4) with silicone grease lightly.
2. Place the diaphragm on the diaphragm disc (3.5) with the dome pointing downwards and screw on the clamping ring (3.3).
3. Check that the diaphragm (3.5) is positioned correctly.
4. Lightly grease the O-ring (3.6) with silicone grease and fit it into the groove on the diaphragm disc (3.5).
5. Insert the valve rod (3.7) from below through the drillhole in the diaphragm disc (3.5).
6. Guide the spring (3.2) over the valve rod and then screw the round nut (3.1) onto the valve rod.
7. Place the diaphragm mount (3) with the valve rod into the central drillhole of the lower housing section (2) and ensure that the diaphragm is firmly fitted.
8. Place on the upper housing (1) section. Turn the housing sections against each other with light pressure to ensure that the diaphragm is firmly fitted.

   ↳ Diaphragm disc mounted

9. Place the upper housing (1) into position. Turn the housing sections against each other with light pressure to ensure that the diaphragm (3.5) is firmly fitted.
10. Fit the screws (4 – 6) with a little fitting grease. Tighten the screws crosswise with approx. 2 Nm.
11. Screw in the hose connection (8) with the O-ring (7) by hand.
12. Fit the O-ring (10) to the outlet and tighten the union nut (11) by hand.

⚐ Vacuum unit installed.

10.5.4 Checking the vacuum unit

10.5.4.1 Checking for leaks

✓ The vacuum unit has been installed.

✓ The inlet valve was checked successfully, dried thoroughly and fitted to the vacuum regulator.

✓ The ejector is ready for operation.

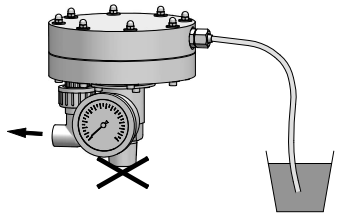

Fig. 21: Checking for leaks

1. Close the input of the vacuum regulator.
2. Connect the ejector to the output of the vacuum regulator.
3. Switch on the ejector.
4. Connect a hose to the connection of the safety valve after approx. 30 seconds.
5. Push the open end under water.
   ↳ The water must not rise in the hose.

⚐ Leakage test concluded.

10.5.4.2 Checking the function of the safety valve

✓ Leakage test is concluded.

✓ Compressed air or nitrogen with an appropriate pressure-relief valve is available.

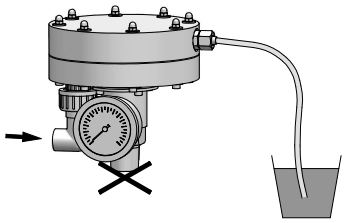

Fig. 22: Check the safety valve

1. Close the input of the vacuum regulator.
2. Connect the compressed air or nitrogen to the output of the vacuum regulator.
3. Fit a hose to the connection of the safety valve.
4. Push the open end under water.
5. Slowly increase the pressure, starting from 0 bar.
   ↳ Initially there is no continuous flow. Bubbles only form as the pressure increases. A continuous flow can be observed from approx. 0.5 bar.
6. Slowly lower the pressure again. The safety valve must be closed below 0.1 bar.

⚐ Check of the safety valve completed.

10.6 Completing the maintenance

1. Make a note of the date and scope of the maintenance performed.
2. Attach a sticker displaying the maintenance date to the device.
3. Fit the vacuum regulator in the system.
4. Recommission the system (→ Commissioning).

⚐ Maintenance completed.

11 Troubleshooting

See below for information about how to rectify faults on the device or the system. If you cannot eliminate the fault, please consult with the manufacturer on further measures or return the device for repair.

Problem	Possible Cause	Remedy
No or insufficient dosing	The chlorine tank is empty.	Connect a new chlorine tank.
	The tank valve or a valve in the chlorine supply is closed or not fully open.	Open valves fully.
	The connection line on the chlorine tank is buckled or blocked.	Clean or replace the line.
	The filter in the chlorine gas is blocked (recognisable via the low pressure on the vacuum regulator input).	Clean or replace the filter. Use a better quality of chlorine gas.
	The supply pressure for the vacuum regulator is too low.	Increase the outlet pressure of the pressure reducing valve.
	Insufficient vacuum due to: (1) A leak in the line. (2) A leak in the dosing device. (3) A reduced ejector performance. (4) A leak on the vacuum regulator (can be detected by permanent priming of air on the blow-off line).	(1) Tighten all screw connections in the vacuum line. Check the O-rings. (2) Refer to the troubleshooting section in the operating instructions of the dosing device. (3) Refer to the troubleshooting section in the operating instructions of the ejector. (4) Perform maintenance on the vacuum unit.
Blow-off line takes in air constantly	Diaphragm is not installed correctly or is torn.	Perform maintenance on the vacuum unit.
	There is soiling in the safety valve, rubber hose piece is defective, PVC nozzle under the rubber hose piece is damaged.	Perform maintenance on the vacuum unit.
Chlorine smell in the room	The safety valve opens because the inlet valve does not close completely due to soiling.	Maintenance of the inlet valve. If necessary, fit a chlorine gas filter.
	A leakage on the overpressure line	Locate and seal leaks using the ammonia test.
	Ejector non-return valve has a leak and back-flowing water generates positive pressure in the vacuum line. The safety valve reacts.	Perform maintenance on the ejector non-return valve.
PVC parts are severely eroded or liquid chlorine is in the flow meter	Chlorine gas condenses to liquid chlorine because the temperature at the inlet valve is lower than that in the chlorine drum.	Mount the pressure reducing valve. Install the pipe heater directly in front of the inlet valve. Install the moisture eliminator.
	Condensed chlorine collects at the lowest point of the pipe system and enters the vacuum regulator.	Install the vacuum regulator at the highest point. Install the inlet line on a continuously rising gradient.
Ice or too much condensation at the inlet valve or pressure line	Chlorine withdrawal is too high.	Connect additional chlorine drums.
	Pressure loss at valves not fully opened causes strong cooling due to expansion	Open valves fully.
Water in the device	The ejector non-return valve has leaks.	Perform maintenance on the ejector non-return valve. If necessary, fit a second non-return valve.
	End of the blow-off line is not protected against water entrance.	Install the blow-off line accordingly. Point the line ends downwards.
Vibrations in the system	The installation coincidentally hits the resonance frequency of the vacuum regulator.	Change the setting of the pressure reducing valve or slightly close a shutoff valve upstream of the vacuum regulator

Table 7: Troubleshooting

12 Shutdown and disposal

12.1 Shutting down the system temporarily

1. Close the chlorine gas container valves.
2. Use the ejector to extract the remaining chlorine.
3. Switch off the ejector.

⚐ Chlorine gas system shut down temporarily.

12.2 Shutting down the system for a longer period of time

1. Close the chlorine gas container valves.
2. Use the ejector to extract the remaining chlorine.
3. Run the chlorinator for approximately five minutes with nitrogen or dry compressed air.
4. Close all the connections to protect the lines and devices from humidity and dirt.
5. Switch off the ejector.

⚐ Chlorine gas system shut down for a longer period of time.

INFORMATION

Before recommissioning the system after a longer shutdown period, we recommend that you perform at least minor maintenance (see Maintenance intervals [▶ 23]).

12.3 Disposing of an old device

Comply with the following instructions when disposing of an old device:

- Before disposing of the device, you must remove any residual chlorine by flushing it with nitrogen or air.
- You must dispose of the device in accordance with local laws and regulations. It should not be disposed of as domestic waste!

As the disposal regulations may differ from country to country, please consult your supplier if necessary.

In Germany, the manufacturer must provide free-of-charge disposal. However, this requires the device to have been safely returned along with a decontamination declaration.

13 Note on EU conformity

The device falls under the purview of the pressure equipment directive 2014/68/EU.

The values stated below do not exceed the limit values in according to article 4, paragraph 1. Therefore, it is designed and manufactured in accordance with valid good engineering practice This pressure device may not carry a CE marking and an EU declaration of conformity will not be issued.

Device designation: Vacuum regulator

Type: C 2525-V

Pressure stage: PN16

Max. temperature: 50 °C

Medium: Chlorine, fluid group 1

The device fulfils all the demands made by the directive(s)

2014/68/EU Pressure equipment directive

14 Decontamination declaration

Decontamination declaration

We forward the following device for repairs:

Device designation: ..... Part no.: .....

Order no.: ..... Date of delivery: .....

Reason for repair: .....

.....

.....

Medium dosed

Description: ..... Irritant: ☐ Yes ☐ No

Properties: ..... Corrosive: ☐ Yes ☐ No

We hereby certify that the device has been thoroughly cleaned inside and out before being returned, contains no hazardous chemical, biological and radioactive agents and has been drained of oil.

If the manufacturer has to perform additional cleaning, we shall be invoiced the costs incurred.

We certify that the aforementioned information is correct and complete and that the device will be returned in accordance with legal requirements.

Company / Address: ..... Phone: .....

..... Fax: .....

..... E-mail: .....

Customer no.: ..... Contact person: .....

Date, Signature: .....

15 Warranty claim

Warranty claim

Date: .....

Sender

Company: ..... Phone: .....

Address: ..... Fax: .....

..... E-mail: .....

..... Contact person: .....

Manufacturer order no.: ..... Delivery date: .....

Device type: ..... Serial number: .....

Nominal power / nominal pressure: .....

Fault details: .....

.....

.....

.....

.....

.....

Operating conditions of the device

Application site / site description: .....

.....

.....

Accessories used: .....

.....

.....

Commissioning (date): ..... Operating hours (approx.): .....

Please state the specific characteristics of the installation and enclose a basic sketch or photograph of the installation, indicating the materials, diameters, lengths and heights.

.....

Lutz-Jesco GmbH

Am Bostelberge 19
30900 Wedemark
Germany
Tel.: (+49 51 30) 58 02-0
E-Mail: info@lutz-jesco.com

www.lutz-jesco.com

BA-20810-02 / 1 / 05/12/2024