Peristaltic Pump 2,8l/h

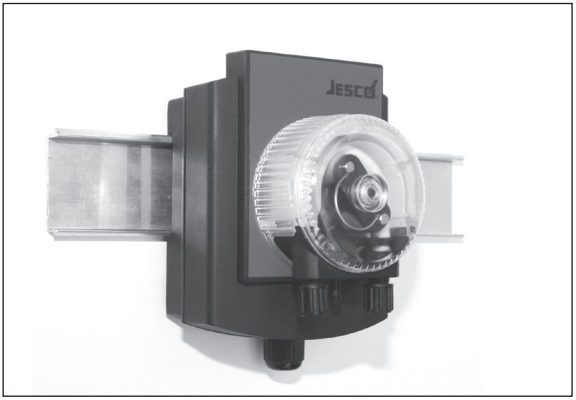

EN 02

Operation & Maintenance Instructions

Read these operation and maintenance instructions before start up!

To be held for future reference.

Dosing | *Liquids*
Conveying | *Gases*
Control | *Systems*

Contents

1. Safety advice 4
1.1 General 4
1.2 Instruction symbols used in the operating manual 4
1.3 Qualification and training of personnel 4
1.4 Important safety instructions 5
1.5 Hazards due to non-compliance with safety instructions 5
1.6 Safe operation 6
1.7 Safety instructions for the owner/operator 6
1.8 Safety instructions for inspection-, maintenance- and installation work 6
1.9 Unauthorised modifications and production of spare parts 6
1.10 Impermissible modes of operation 6
1.11 Metering of chemicals 6
1.12 Scope of delivery 7

2. Proper use 7

3. Function 7

4. Technical Data 8

5. List of chemical resistance 9

6. Dimensional drawing 10

7. Installation 11
7.1 General information 11
7.2 Wall mounting 11
7.3 Mounting the control cabinet 12
7.4 Hydraulic Installation 12
7.5 Electric connection of the pump 14
7.6 Installation example 16

8. Start-up 17

9. Shutdown 18

10. Maintenance 18
10.1 Changing the hose 19
10.2 Changing the rotor 20

11. Spare parts 21

12. Troubleshooting **22**

13. Declaration of conformity **23**

14. Declaration of harmlessness **24**

15. Warranty **25**

16. Revision **26**

1. Safety advice

1.1 General

This operating manual contains basic information to be adhered to during installation, operation and maintenace. It is therefore essential that the fitter as well as the relevant qualified staff/operator read the operating manual before installing and starting up. It must be accessible at the dosing pump/system at all times.

Not only must the general safety instructions under this main heading of Safety be observed, but also the specific safety instructions outlined under the other headings.

1.2 Instruction symbols used in the operating manual

If the safety instructions in this operating manual are not adhered to it may endanger people, the environment and the dosing pump/system. These instructions are denoted by the following symbols:

DANGER!
Refers to an imminent danger. Non-compliance can lead to death or serious injury.

WARNING!
Refers to a potentially dangerous situation. Non-compliance can lead to death or serious injury.

CAUTION!
Refers to a potentially dangerous situation. Non-compliance can lead to minor injury or damage to property.

NOTICE! or INFORMATION!
Are safety instructions which if ignored can lead to danger to the machine and its functions.

IMPORTANT!
This is additional information to ensure that work is facilitated and a trouble-free operation.

There are marking affixed directly onto the pump, e.g.:

- specification label
- warning notices

that must be observed without fail and remain fully legible at all times.

1.3 Qualification and training of personnel

The personnel employed for the installation, opertaion, inspection and maintence work must be qualified to do so. The user has to define precisley the areas of responsibility, competence and supervision of the personnel. If the personnel do not have the necessary knowledge, they must be trained and instructed. If necessary, the manufacturer/supplier

may do this on behalf of the pump's owner. Furthermore, the owner of the system has to ensure that the contents of this operating manual is fully understood by the personnel.

1.4 Important safety instructions

When installing and using this electrical equipment, basic safety precautions should always be followed, including the following:

READ AND FOLLOW ALL INSTRUCTIONS!

WARNING!
To reduce the risk of injury, children are not permitted to use this product, they should be closely supervised at all times.

WARNING!
Risk of electric shocks.
Connect the device only to a grounding receptacle that is secured by a ground-fault-circuit-interrupter (GFCI). Contact a qualified electrician if you cannot verify that the receptacle is protected by a GFCI.

Do not bury the cable. Fuse the cable in order to minimmise damage from lawn mowers, hedge trimmers and other appliances.

WARNING!
To reduce the risk of an electric shock, replace a damaged cable immediately.

WARNING!
To reduce the risk of an electric shock, do not connect the unit to an extension cord with electric voltage, use a suitably located socket instead.

DANGER!
Burn hazard.
Compressional wave: pieces flying out can kill you. The peristaltic pump must never be used in an explosive area.

SAVE THESE INSTRUCTIONS!

1.5 Hazards due to non-compliance with safety instructions

Failure to comply with safety instructions may endanger not only people, but also the environment and the dosing pump/system. Non-compliance with the safety instructions can lead to the loss of all claims for damages. Non-compliance can lead to the following hazards:

- Malfunction of the dosing pump/system's important functions.
- Malfunction of prescribed methods of maintenance and servicing.
- Endangering people through electrical, mechanical and chemical causes.
- Endangering the environment due to leakages of hazardous substances.

1.6 Safe operation

The safety instructions in this operating manual have to be observed. The owner is responsible for ensuring compliance with local safety regulations.

1.7 Safety instructions for the owner/operator

Leakages (e.g. due to ruptures in the hose) of hazardous materials conveyed (e.g. abrasive, toxic) have to be discharged in such a way so that there is no danger to people and the environment. Statutory regulations must be observed.

Hazards through electric currents have to be eliminated (for full details refer to the VDE (German Electrical Engineering Association) regulations, for example, and the local Electricity Board, as well as chapter 1.4)

1.8 Safety instructions for inspection-, maintenance- and installation work

The owner must ensure that all inspection, maintenance and installation work is undertaken by authorised and duly qualified personnel who have also studied this operating manual.

Work on the pump must be done strictly when it is at a complete stop. The procedure specified in this operating manual for shutting down the dosing pump/system must be observed without fail.

Peristaltic pumps or systems that convey harmful media have to be decontaminated before work starts.

After work has finished all the safety mechanisms and guards have to be directly refitted and/or reactivated.

The instructions outlined in chapters 7 and 8, under „Installtion“ and „Start up“ must be observed before starting up.

1.9 Unauthorised modifications and production of spare parts

Modifications and alterations are only permitted after consulting with the manufacturer. Genuine spare parts and accessories authorised by the manufacturer ensure security.

IMPORTANT!
The use of spare parts that are not genuine negates all claims for damages.

1.10 Impermissible modes of operation

All modes of operation that are not in line with those in chapter 2 „Proper Use“ are impermissible and consequently all claims for damages are forfeited.

1.11 Metering of chemicals

CAUTION!
When working on batchers the accident prevention regulations applicable on-site must be observed and the prescribed personal protective clothing must be worn This operating manual contains basic information to be adhered to during installation, operation and maintenace. It is therefore essential that the fitter as well as the relevant qualified staff/op-

erator read the operating manual before installing and starting up. It must be accessible at the dosing pump/system at all times.

Not only must the general safety instructions under this main heading of Safety be observed, but also the specific safety instructions outlined under the other headings.

1.12 Scope of delivery

IMPORTANT!
Please unpack the peristaltic pump and ordered accessories attached with great care, so that small parts do not remain unnoticed in the packaging. Please compare the scope of delivery immediately with the delivery note. The reason for any discrepancies has to be ascertained.

2. Proper use

The proper use of the peristaltic pump is with the supply and metering of chemicals under low pressure.

The appropriate operational conditions in chapter 4 „Technical data“ have to be maintained.

3. Function

The peristaltic pump is a positive displacement pump. The rotor’s pressure rolls squeeze the pump’s hose together and when they roll on the hose they push the medium in the hose in the direction of the pressure connection.

This functional principle is distinguished by its:

- simple function
- good suitability to media involving gas

The pressure rolls are spring loaded and can avoid possible deposits in the pump hose. As a result the service life of the pump is increased for media with solid parts.

The delivery rate of the peristaltic pump is controlled by an on/off switch on the power supply.

4. Technical Data

Delivery rate	2.8 l/h
Accuracy	±10% (with a new hose
max. manometric pressure	1.5 bar
max. capillary rise	300 mbar
No. of revolutions	30 /min
Voltage	230V 50Hz
Protection system	IP 65
Power input	max. 5 W
max. power-on time	100%
Environment temp.	5..40 °C
Media temp.	5..50 °C
Dimensions (WxHxD)	106x157x112mm
Weight	ca. 750 g
Hydraulic connections	for PE or PVC-hose 4/6mm
Electric supply	1.9 m power line with safety plug
Material in contact with media	Pump hose NORPRENE® NORPRENE® is a registered trademark of Saint-Gobain Performance-Plastics.

5. List of chemical resistance

The following list shows the hose pump's chemical resistance against usual chemicals in the water preparation.

Medium	chem. formula	concentration.	Performance
Aluminiumsalt		all	+
Calcium hypochlorite	CaCl(ClO)	20%	+
Ferrous salts		all	+
Common salt	NaCl	20%	+
Sodium hyperchlorite	NaClO	12.5%	+
Caustic soda	NaOH	40%	+
Hydrochloric acid	HCl	10%	+
		37%	0
Sulphuric acid	H2SO4	30%	+
		95%	-
Hydrogen peroxide	H2O2	30%	+
		90%	0

(+ / 0 / - → none / minor/ stronger chemical attack)
The chemical resistance was determined at 20°C.

Please ask the supplier with regard to information on other chemicals or investigate them through preliminary tests. For this purpose a section of hose is weighed and measured, placed in the chemical for at least 24 hours, subsequently washed well and dried. The gain in weight, change in size, moisture expansion and other changes such as brittleness and discolouring are evaluated. If there is no clear change, then the pump hose can be used for this chemical.

6. Dimensional drawing

The peristaltic pump is delivered in a closed casing for wall mounting. Without a casing bottom the pump can also be set up on level surfaces, e.g. switch/control cabinets.

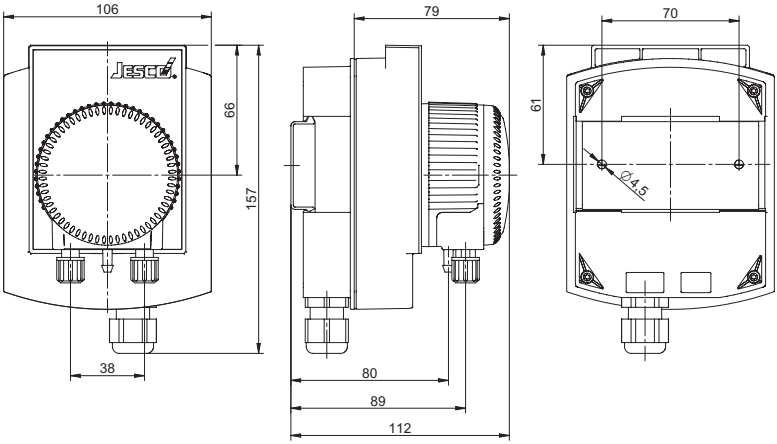

Fig. 6.1: Dimensional drawing [mm]

7. Installation

7.1 General information

The choice of peristaltic pump when planning a system as well as the installation and the operation, has to be done with due consideration of the local applicable regulations. This applies to the choice of suitable materials, the handling of chemicals and the electrical installation.

It is the planner's and the owner's responsibility to ensure that the entire system and the pumps intergrated therein are designed in such a way that a chemical leak due to malfunction of worn parts (e.g. pump hose) or ruptured hoses, does not lead to any sustainable damages to plant components and buildings. When there is a great risk of danger in the chemical system, the installation has to be done in such a way that even if the pump breaks down no disproportionately high consequential damages can arise. We therefore recommend the installation of leakage monitors and collecting trays.

Operational reliability requires the use of appropriate accessories such as check valves and injection points. Suitable tools always have to be used for the installation work of plastic connection parts. In order to avoid corrosion you should only expend adequate power.

7.2 Wall mounting

The peristaltic pump has to be mounted higher than the maximum fluid level of the reserve of the medium to be pumped in. The hose connections point downwards.

There is a wall holder with the delivery of the pump for wall mounting individual pumps. To mount multiple pumps in a row, the following profile rails are available for delivery:

3-fold	L=330mm	Item-No. 38314
6-fold	L=660mm	Item-No. 38317
9-fold	L=990mm	Item-No. 38318

The wall holder has an asymmetrical profile.

The squared conture points upwards.

Tools are not required to mount the pump onto the wall holder. Connect on top first and then press the pump on the bottom, until you hear it click in. To take the pump down, hold on to the bottom of the pump casing and pull it from the wall.

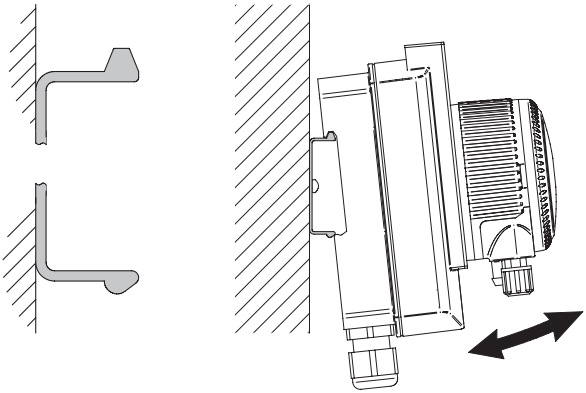

7.3 Mounting the control cabinet

Without a casing bottom the peristaltic pump can also be mounted on to level surfaces like control cabinets or other casings, for example.

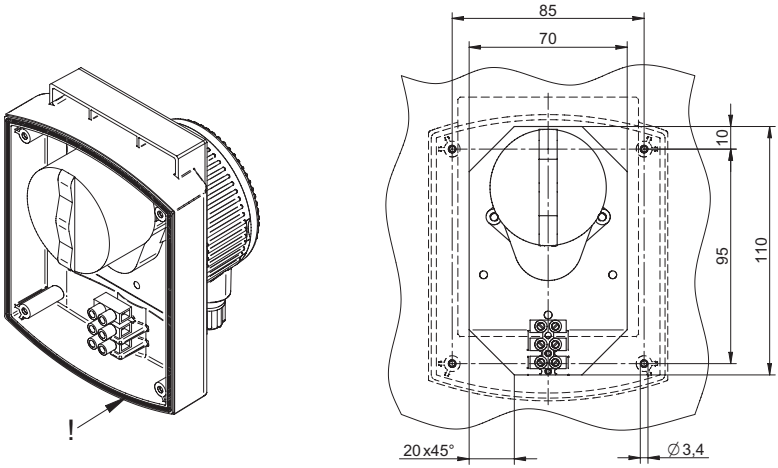

Fig. 7.1: Front casing without casing bottom

When mounting make sure that there is a good sealing fit between the casing cover and the wall. The support area has to be level, flat and compact enough, so that the sealing strip can seal up well against the control cabinet

The fastening screws have to fit the thickness of the wall. The screws delivered with the unit are suitable for a wall thickness of 3mm. The screw clamp is offset in the casing cover at an upwards spacing .

WARNING!
Take care that the power supply line does not lie on the exhaust's sharp edges and so be damaged.

7.4 Hydraulic Installation

IMPORTANT!
When choosing the hose's diameter and length take into consideration the total pressure of the installation, which consists of the system pressure and all pressure drops in the fittings and hoses. This total pressure may not exceed that indicated in the technical data – chapter 4.

IMPORTANT!

If the pipes are laid badly vapour locks can amass in the dosing line, and they become larger and smaller with variations in pressure. As a consequence the flow in the dosing line can become intermittent. A check-valve on the peristaltic pump's pressure socket rectifies this.

CAUTION!

The pump head's drainage connection has to be attached in such a way that leakages from the pump head do not cause any damage. The hose should end, for example, in a collecting tray with a leakage monitor. The discharge from the drainage hole must be possible on a free downward gradient.

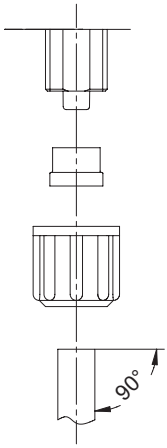

Fig. 7.2: Clamp connection

The process hose is fixed on to the pump with hose clamp connectors. The connection consists of the integrated hose adaptor, a clamping ring and a coupling nut. The clamping ring delivered with the unit is suitable for hoses made of PVC and PE. Harder hoses require a different clamping ring (e.g. for PTFE item number: 88255)

- cut the hose end square
- slide the coupling nut and clamping ring on to the hose end (follow the direction of the clamping ring)
- slide the hose end up to the stopper on the adaptor.
- slide the clamping ring on to the adaptor
- tighten the coupling nut by hand. (approx. 10 Ncm)

Suction pipe

In most installations there is a suction pipe with a check valve (=non-return valve), which prevents flow back in worn out pump hoses, too.

Injection point

The injection points are there to intervene on the metered mediums in a main current and also fufill the function of reversal at the same time. The injection piece is mostly mounted from the top in the main line ① (see fig. 7.3). It is recommended to mount it from the bottom if there are media which are subject to granulation, so that air locks cannot be sealed inside ②.

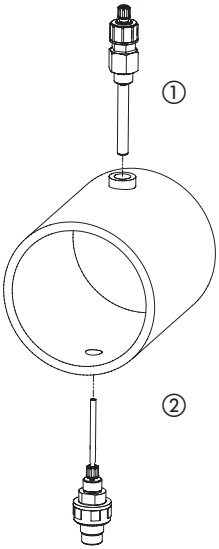

Fig. 7.3: Injection point mounting positions

For media that are prone to contaminating the injection point, it is recommended to use self-cleaning injection points. If necessary, injection points which can be dismantled and sealed off for maintenance can be used.

IMPORTANT!
With peristaltic pumps, it is especially important to bear in mind that injection points use low pressure drops, as the peristaltic pumps can in principle only build up low pressure

7.5 Electric connection of the pump

The electric connection of the peristaltic pump has to comply with the local regulations and may only be carried out by qualified personnel.

CAUTION!
The peristaltic pump does not have an internal fuse. The fuse protection is to be undertaken by the customer.

CAUTION!

Relays for the main voltage switch have to be protected from damages through demolishing sparks, by a wireless quenching circuit.

The voltage supply is takes place via a power cable with a mains plug. A suitable socket shall be provided for near to the pump.

The required degree of protection is guaranteed by the professional installation of the electrical installation. Unused cable openings have to be sealed shut.

To avoid an unwanted metering after the end of the process an electrical locking mechanism shall be provided for the pump.

The pump's flow rate is proportioned by turning the power supply to the process on and off. Normally a circuit is in the minute cycle and the switching frequency should not excede 10/min.

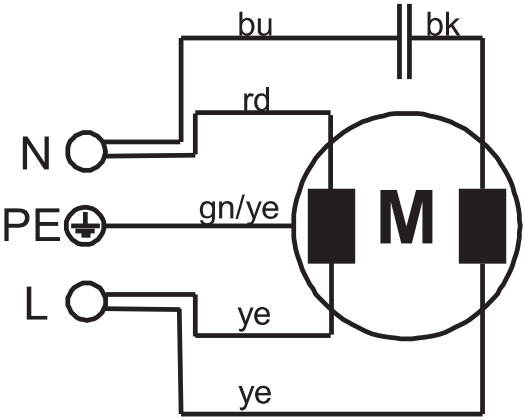

Fig. 7.4: 230V / 50 Hz power connection

Cable colours	
bu:	blue
bk:	black
gnye:	green-yellow
rd:	red
ye:	yellow

7.6 Installation example

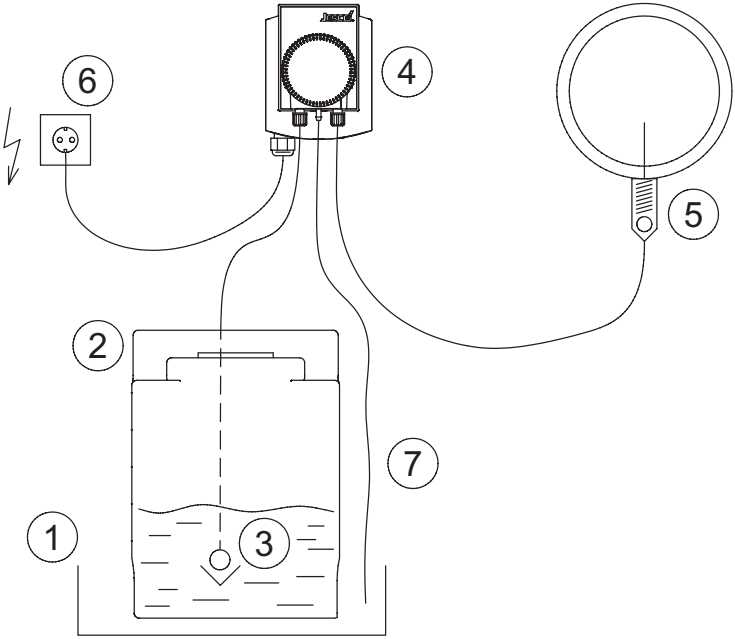

Fig. 7.5: Installation example

Key:	
①	Collecting tray
②	Chemical canister
③	Suction line with check valve
④	Peristaltic pump
⑤	Injection point with check valve
⑥	Socket with fuse pin
⑦	Drainage downpipe of the peristaltic pump

8. Start-up

CAUTION!
When working on the peristaltic pump wear personal protective equipment in accordance with the current accident prevention regulations!

Safety goggles

Protective gloves

Protective clothing

Before starting up the dosing pump all the tasks outlined in the section „Installation“ (chapter 7) have to be carried out. The safety instructions must be observed.

The peristaltic pump sucks in automatically and fills the pump hose during normal operation.

If the dosing process requires it at the beginning, the pump hose and hose lines have to be filled with the chemicals before the system is started up. For this purpose switch to manual operation and wait until all hose lines are filled. Afterwards switch the control back to the regular operation.

When starting up, all the hose connections have to be checked for their impermeability under operational pressure. If leakages are noticeable, turn off the pump and replace the hose connection with a new one. If leakages are noticeable, turn the pump off and make a new hose connection. Leaked chemicals have to be removed as per local regulations.

CAUTION!
Release the pressure in the line before opening the hose connection, as chemicals could spray out.

9. Shutdown

Before maintenance work or longer-term service interruption empty the chemicals in the peristaltic pump and flush it out with harmless mediums. (Water is often suitable).

CAUTION!
Surplus chemicals have to be disposed of professionally. When working on the peristaltic pump wear the personal protective equipment in accordance with the current accident prevention regulations!

Safety goggles

Protective gloves

Protective clothing

CAUTION!
Next, the pump has to be disconnected from the power supply and secured from resetting.

10. Maintenance

Peristaltic pumps are low maintenance pumps. Only the chemically and mechanically highly loaded pump hose is subject to wear. Regular replacement of the hose protects against interruptions in service!

If there should be a chemical attack on the rotor when the hose is ruptured, this can also be exchanged.

If the pump is completely disjointed, the screws have to be tightened to the following torque:

Casing screws:	20 Ncm
Pump head-fixing:	15 Ncm

CAUTION!
For all work carried out on the pump the power supply has to be disconnected and secured against resetting.

CAUTION!
Release the pressure before opening the hose connections, so that chemicals cannot spray out. The personal protective equipment in accordance with the current accident prevention regulations have to be worn!

Safety goggles

Protective gloves

Protective clothing

10.1 Changing the hose

IMPORTANT!
The hose's lifetime in continuous use amounts to approx. 1,000 hours. It is dependent on the loading characterised by the medium, temperature, the suction level, pressure and how often it is turned on. As the pump is not in continuous use in most applications, a yearly hose replacement is often sufficient.

A worn hose loses its elasticity. Consequently, it has a lower capacity. A burst hose first appears in the later stages of wear and tear.

Tools are not required to change the hose. The replacement hose is already mounted by the factory on the hose carrier.

- Release pressure.
- Empty the pump of chemicals and flush it out with a harmless medium (water is often suitable).
- Disconnect from the power supply and secure against resetting.
- Disconnect hose connections from the process hose.
- Dismantle the pump-head cap. If required a coin is helpful on the side notch on the pump head. Care has to be taken so that the ball-bearing does not fall down.
- Place springs on the rotor in the right bracket.
- Turn the rotor clockwise with help from the spring and at the same time pull out the hose carrier with the pump hose to the front.

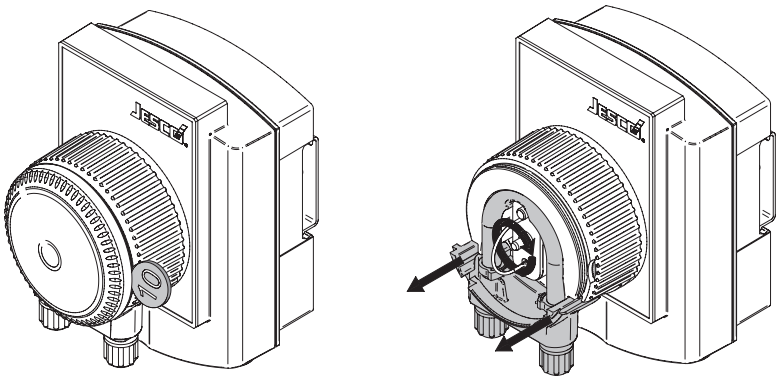

Fig. 10.1: Opening pump-head for changing the hose

- Put the new pumps in, in reverse order. When assembling, the rotor has to be screwed back on by hand. Make sure that the pump connection lies in the middle of the track.
- Place the ball-bearing in the cap.
- The pump head cap has to lock on to the pump head.
- Start up as per section 8.

10.2 Changing the rotor

The rotor is pushed up on to the gear motor's shaft. After removing the pump hose it can be dismantled with a pull on the tension spring.

When mounting, a new rotor shaft's flat sections have to square up with the rotor.

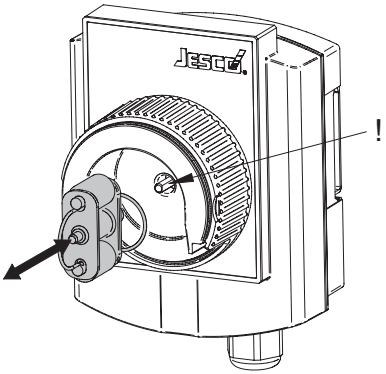

Fig. 10.2: Removing the rotor#

11. Spare parts

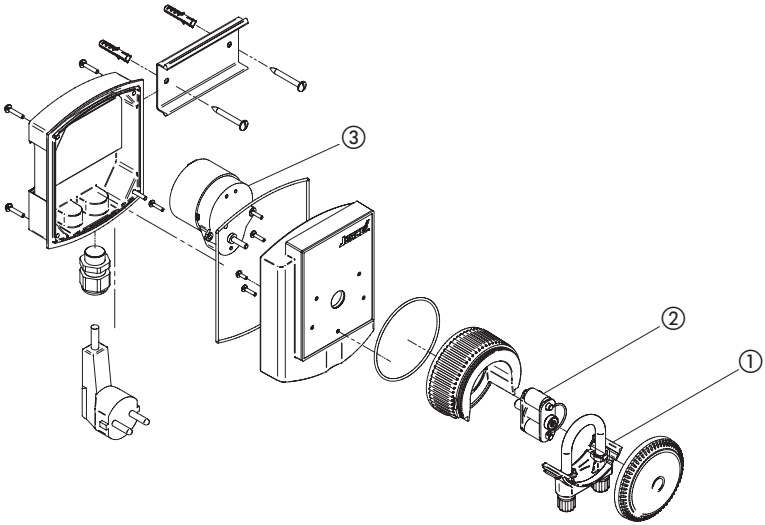

Pos.	Title	No.	Item.No.
①	Complete spare hose	1	38106
②	Complete rotor	1	38105
③	Gear motor	1	37988

12. Troubleshooting

Nonconformance	Cause	Corrective measures
the pump requires too little or nothing	wear or hardening of the pump hose	replace pump hose
	counter pressure too high	reduce counter pressure
	suction level too high	mount the pump lower
	contamination in the pump hose	clean the pump hose or exchange it. Ascertain the cause of contamination.
	the injection point is blocked by precipitation of carbonate	clear the blockage, if necessary mount self-cleaning injection points
	the jacking power of the rolls is too low	springs are overloaded, replace the rotor.
	the pump hose is not lying in the middle of the track	see below
The pump hose is not lying in the middle of the track	hose is twisted in itself	mount without tension
	The pinch rollers are not completely straight, because the rotor is worn	replace the rotor
	ball-bearing is missing, because it was forgotten during the hose change over	mount the ball-bearing
The rotor does not turn	interrupted power supply	turn on the power supply
	the motor is overloaded because the hose has hardened	replace the pump hose
	defective motor	replace the motor
Pressure thrust in the hose line	expanding vapour locks in the pressure line causing flow variations	place the line in such a way that vapour locks can no longer collect together
		check-valve to be provided at the pump's pressure connection.

If the interruptions cannot be corrected with the above information, it is necessary to send the dosing pump to the factory and/or to contact our sales team for further measures. Repair works will be carried out immediately.

EU-Konformitätserklärung
Der Unterzeichnete Lutz-Jesco GmbH, Am Bostelberge 19, 30900 Wedemark, bestätigt, dass die nachfolgend bezeichneten Geräte in der von uns in Verkehr gebrachten Ausführung die Anforderungen der harmonisierten EU-Richtlinien, EU-Sicherheitstandards und produktspezifischen Standards erfüllen. Bei einer nicht mit uns abgestimmten Änderung der Geräte verliert diese Erklärung ihre Gültigkeit.

(EN) EU Certificate of Conformity
The undersigned Lutz-Jesco GmbH, Am Bostelberge 19, 30900 Wedemark. hereby certifies that, when leaving our factory, the units indicated below are in accordance with the harmonised EU guidelines, EU standards of safety and product specific standards. This certificate becomes void if the units are modified without our approval.

(FR) Certificat de conformité aux directives européennes
Le constructeur, soussigné: Lutz-Jesco GmbH, Am Bostelberge 19, 30900 Wedemark, déclare qu'à la sortie de ses usines le matériel neuf désigné ci-dessous était conforme aux prescriptions des directives européennes énoncées ci-après et conforme aux règles de sécurité et autres règles qui lui sont applicables dans le cadre de l'Union européenne. Toute modification portée sur ce produit sans l'accord express de Jesco supprime la validité de ce certificat.

(ES) Declaración de conformidad de la UE
El que subscribe Lutz-Jesco GmbH, Am Bostelberge 19, 30900 Wedemark, declara que la presente mercancía, objeto de la presente declaración, cumple con todas las normas de la UE, en lo que a normas técnicas, de homologación y de seguridad se refiere, En caso de realizar cualquier modificación en la presente mercancía sin nuestra previa autorización, esta declaración pierde su validez.

(NL) EU-overeenstemmingsverklaring
Ondergetekende Lutz-Jesco GmbH, Am Bostelberge 19, 30900 Wedemark, bevestigt, dat het volgende genoemde apparaat in de door ons in de handel gebrachte uitvoering voldoet aan de eis van, en in overeenstemming is met de EU-richtlijnen, de EU-veiligheidsstandaard en de voor het product specifieke standaard. Bij een niet met ons afgestemde verandering aan het apparaat verliest deze verklaring haar geldigheid.

(HU) EG (EK)– Egyezőségi nyilatkozat
A Lutz-Jesco GmbH, Am Bostelberge 19, 30900 Wedemark ezúton kijelenti, hogy a szóban forgó termék annak tervezése és szerkezeti módja, valamint forgalomba hozott kivitele alapján a vonatkozó alapvető biztonság technikai és egészségügyi követelményeknek és az alábbi felsorolt EG –irányelveknek minden szempontból megfelel. A terméken engedélyünk nélkül végrehajtott módosítások következtében jelen nyilatkozat érvényét veszíti.

(PT) Certificado de conformidade da UE
Os abaixo mencionados Lutz-Jesco GmbH, Am Bostelberge 19, 30900 Wedemark, por este meio certificam que ao sair da fábrica o aparelho abaixo mencionado está de acordo com as directrizes harmonizadas da UE, padrões de segurança e de produtos específicos. Este certificado ficará nulo se a unidade for modificada sem a nossa aprovação.

Bezeichnung des Gerätes:	**Dosier - Schlauchpumpe**
Description of the unit:	**Peristaltic Pump**
Désignation du matériel:	**Pompe peristatique**
Descripción de la mercancía:	**Bomba peristatica**
Omschrijving van het apparaat:	**Doseer-slangenpomp**
A termék megnevezése:	**Adagoló - tömloszivattyú**
Designação do aparelho:	**Bomba mangueira**

Typ / Type / Tipo / Típusjelölés:	EU-Richtlinie / EU directives/ Directives européennes / Normativa UE / EU-richtlijnen / Vonatkozó EG-irányelvek / Directrizes da UE	Harmonisierte Normen / harmonized standards / Normes harmonisées / Estándares acordemente / Toegepaste normeringen / Hatályos normák / Normas harmonizadas
Schlauchpumpe 2,8l	**2006/42/EG**	**EN 60335-1 : 2006**
	2006/95/EG	**EN 60335-2-41 : 2004**
		EN 61326-1 : 2006
		EN 61000-3-2 : 2005
		EN 61000-3-3 : 2005
		EN 809 : 1998
		EN ISO 12100-1 : 2003

i.V. Dipl. Ing. Klaus Albert
Lutz-Jesco, Wedemark, 01.07.2008

Technische Leitung / Technical Departement Manager / Direction technique / Dirección Técnica / Hoofd technische dienst / Műszaki irodavezető / Director Técnico

CE-Schlauchpumpe-V04

14. Declaration of harmlessness

Please copy and send in with your apparatus!

Declaration of harmlessness

(please fill out a separate form for each appliance – e.g. pump or accessory)

We forward the following dosing equipment for repairs:

Type (dosing pump or accessory): _____

Part-no.: _____

Order-no.: _____

Delivery date: _____

Reason for repair: _____

_____

Medium used: _____ Properties: irritant: yes/no
corrosive: yes/no

We hereby certify that the machine has been thoroughly cleaned inside and out before its dispatch and that it is free from health risk chemical, biological and radioactive materials as well as having been drained of oil. *)

If Lutz-Jesco find it necessary to carry out further cleaning work, we accept the charge will be made to us.

We certify that the aforementioned information is correct and complete and that the unit is dispatched in compliance with legal requirements.

Company / address:

Phone:

Fax:

E-Mail:

Customer-number:

Contact person:

_____ _____

Date Signature / stamp

*) If not applicable please cross out!

Please send with the unit and display anon the outer packaging.

Lutz-Jesco GmbH, Am Bostelberge 19
30900 Wedemark, Germany

15. Warranty

Please copy and send with the device.
If the device breaks down within the period of warranty, please return it in a cleaned condition with the complete warranty application, filled out.

Sender

Company:..... Phone:.....Date:.....

Address:.....

Contact person: .....

Lutz-Jesco order-no.: ..... Delivery date:.....

Device type:..... Serial no.: .....

Nominal capacitynominal pressure: .....

Description of fault: .....

.....

.....

Type of fault:

1. Mechanical fault
- premature wear
- wear parts
- breakage/other damage
- damage in transit

2. Electrical fault
- loose connections such as plug connector or cable
- operating elements (e.g.. switches/buttons)
- electronics - corrosion

3. Leaks .
- connections
- dosing head

4. No or inadequate suction
- defective diaphragm
- other

Service conditions of the dosing pump

Point of use / system designation:.....

Accessories used (Suction line, PDS, etc.):.....

.....

.....

Commissioning (date):.....

Duty peroid (approx. operating hours): .....

Please describe the specifics of the installation and provide a simple diagram with details of the material, diameter, length and levels.

16. Revision

This Operating Manual is valid for the following devices:

Device	Revisions-Stand
Peristaltic Pump 2,8l/h	10/2007

It contains all the technical information required for installation, start-up and maintenance. Should you have any questions or require further informations regarding these operating instructions, please contact the manufacturer or its official national representative