General Description

Lutz Jesco America metering pumps are ideal for chemical dosing applications which require accurate metering. To optimize metering performance, we offer the FXM2 series pumps with improved performance. They include expanded logic programming and functionality, but also higher capacity.

Flow rate is not affected by variation of the discharge pressure condition. Positive displacement of the tube bore with zero slip provides same output volume on every cycle. The compression point of the tube acts as self-cleaning check valve without clogging risk providing clear flow path with no possibility for vapour lock.

Features

- Fully reversible operation
- Dry run capability
- Field switchable power cord - no need to open pump housing
- Digital touchpad adjustment – precise and reliable
- Available display languages: English, Finnish, French, German, Russian and Spanish

Benefits

- Accurate and safe metering
- Versatile system connectivity
- Self-priming (up to 90 % of full vacuum)
- Only the tube and tube fittings are in contact with the process medium
- Serviceable rotor construction for ease of maintenance

Tubing Descriptions

- TYGON lined Norprene® (acids)
- TYGOTHANE® (for oils and fats)
- NORPRENE® (for chemicals)
- PVDF - Adapter fittings

Accessories wetted components

- Suction tubing: Clear PVC
- Suction strainer: Natural polypropylene
- Discharge tubing: Natural polyethylene (LLDPE)
- Injection fitting with check valve: Body & insert: PVDF

Non-wetted components

- Pump head: PBT GF30
- Housing: Powder coated aluminium
- Pump head cover: Clear acrylic
- Cover screws: 300 SS, polypropylene caps
- Motor shaft: Chrome plated steel
- Leak detection: Capacitive non-contact
- Roller assembly: Rotor: PBT GF30
- Roller assembly: Rollers: POM
- Roller assembly: Roller bearings: ball bearing

Ideal applications

- Waste water/water treatment chemicals
- Reagents for mining processes
- Pulp & paper chemical metering
- Various industrial chemical dosing duties

Certifications

- UL standard 778, 6th edition, motor operated water pumps
- CAN/CSA standard C22.2 No. 109-14, 5th edition
- WQA according to NSF/ANSI/ CAN 61 & NSF/ANSI/CAN 372 (applies for FXM pumps, Norprene® tubes)

Tubing Capacity Chart: PERIDOS FXM2

Maximum Flow Rate and Pressure Capabilities

Tube number	Tubing material	Bar/PSI	Liters/Gallons per hour
N011	Norprene	8,6/125	11/2.9
N092	Norprene	8,6/125	92/24.3
N176	Norprene	2,1/30	176/46.5
G162	Tygothane	4,5/65	162/42.8
T165	Tygon lined Norprene	3,5/50	165/43.6

Dimensions

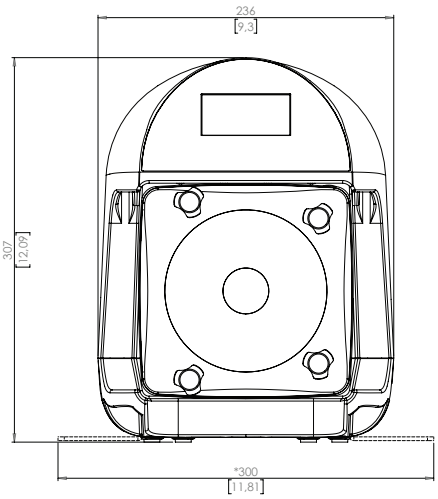

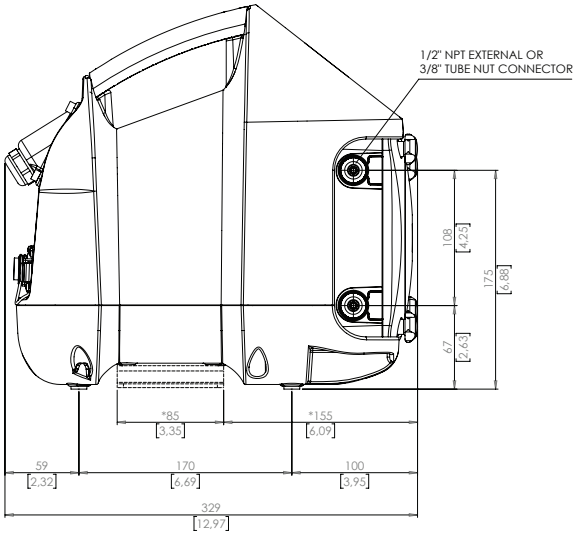

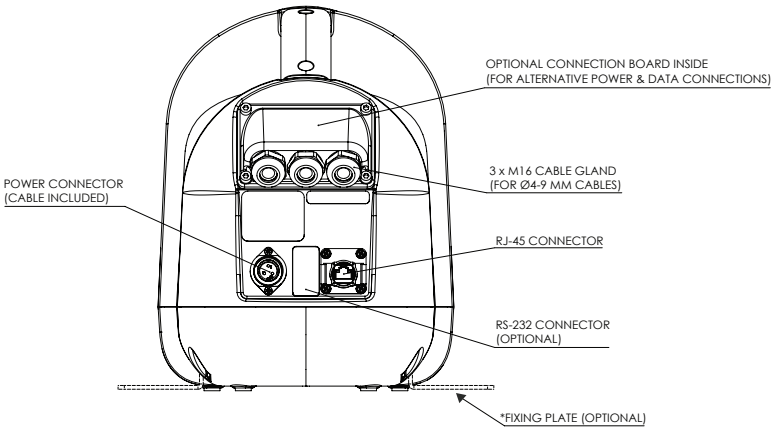

Dimensions in mm (inches in brackets)

Exploded view of pump head FXM2-S

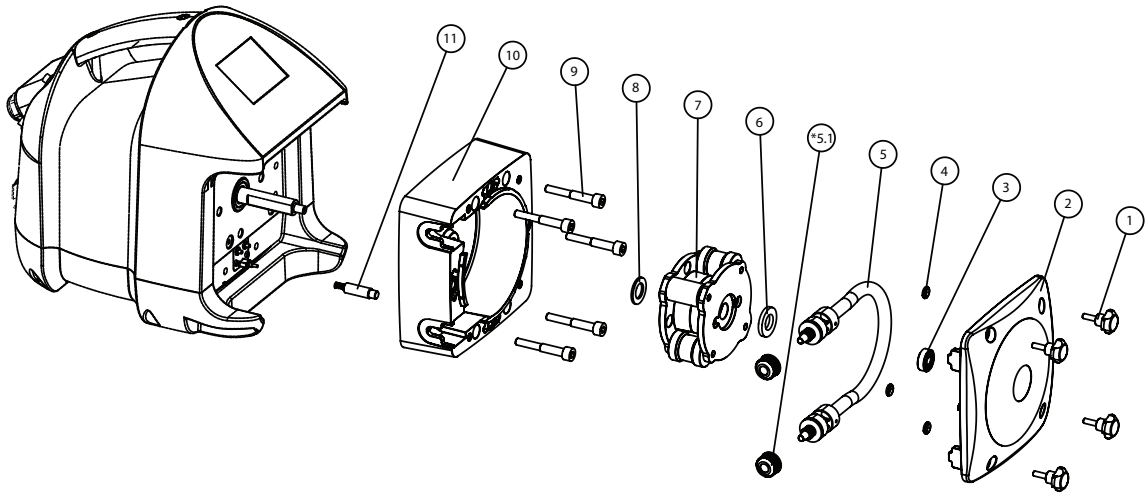

ITEM NO.	DESCRIPTION	QTY.
1	SCREW	4
2	COVER	1
3	BEARING	1
4	O-RING	3
5	TUBE ASSEMBLY	1
6	WASHER	1
7	ROTOR ASSEMBLY	1
8	WASHER	1
9	HEX SOCKET SCREW	5
10	BODY	1
11	PLUNGER ASSEMBLY	1

Parts 5 and 7 are modular and order specific.

*5.1: Only with 3/8” tube nut connectors.

Technical Data - FXM2 Metering Pump

Technical Data	Description
Maximum flow*	176 l/h / 46.5 GPH
Maximum pressure*	8,6 bar / 125 psi
Maximum viscocity	5000 cp
Maximum suction lift	9 m water, 0.1 bar (Abs)/30 ft. water, 1.5 psi (Abs)
Remote adjustment	4-20 mA, 0-10 VDC or pulse
Inputs	2 remote inputs, 1 assignable input
Industrial network protocols	Ethernet/IP, Modbus TCP
Feedbacks	4-20 mA, pulse and 4 alarm contacts
Voltage (max amp)	Automatic identification/96-264 VAC 50/60 Hz/(2 amp)
Accuracy	± 0.5 %
Repeatability	± 0.5 %
Output speed control range	1-100% in 0.1% increment 0.02-1% in 0.01% increment 5000:1 turndown
Enclosure	NEMA 4X / IP66
Plug type	125V AC, NEMA 5/15 (US) 230V AC, NEMA 6/15 (US) 230V AC, CEE7/VII (Europe) 230V, BS 1363 (UK) 230V AC, AS/NZS3112 (AUS)
Maximum fluid temperature	54 °C / 130 °F
Minimum & maximum ambient operating temperature	0 °C to 46 °C / 32 °F to 115 °F
Weight (shipping weight)	13 kg (14 kg) / 28.6 lb (30.8 lb)
Motor power	0,19 kW / 0.25 hp

*See page 2 for tube specific maximum flow rates and pressures

042925

Lutz-JESCO America Corp. 55 Bermar Park Rochester, NY 14624 USA Phone: 585-426-0990 Fax: 585-426-4025 E-Mail: mail@jescoamerica.com http://www.lutzjescoamerica.com Toll Free: 1-800-554-2762