Motor-driven diaphragm dosing pump
MEMDOS LA

Operating instructions

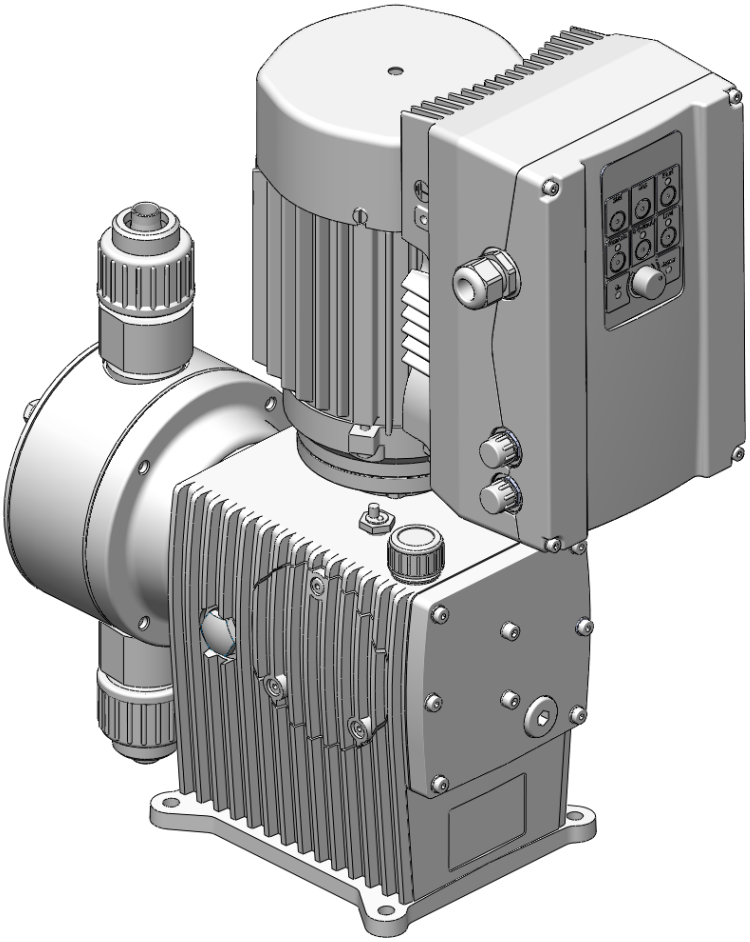

Read the operating manual!

The user is responsible for installation and operation related mistakes!

Translation of the original instructions

BA-10412-02-V07

© Lutz-Jesco GmbH 2024

Dosing Conveying Control | Liquids Gases Systems

Table of Contents

1 Notes for the Reader 4
1.1 General non-discrimination 4
1.2 Explanation of the signal words 4
1.3 Explanation of the warning signs 4
1.4 Identification of warnings 4
1.5 Instruction for action identification 4

2 Safety 5
2.1 General warnings 5
2.2 Hazards due to non-compliance with the safety instructions 6
2.3 Working in a safety-conscious manner 6
2.4 Personal protective equipment 6
2.5 Personnel qualification 6

3 Intended use 8
3.1 Notes on product warranty 8
3.2 Intended purpose 8
3.3 Principles 8
3.4 Prohibited dosing media 8
3.5 Foreseeable misuse 8
3.6 Incorrect assembly 8

4 Product description 10
4.1 Properties 10
4.2 Scope of delivery 10
4.3 Structure of the dosing pump 10
4.4 Function description 11
4.5 Rating plate 11

5 Technical data 12
5.1 Delivery capacity data 12
5.2 Operating conditions and limits 13
5.3 Approved media temperature 13
5.4 Other data 13
5.5 Motor data 14

6 Dimensions 15
6.1 MEMDOS LA 4 – 80, 150 15
6.2 MEMDOS LA 110, 160 – 1010 16

7 Installing the Dosing Pump 17
7.1 Set up information 17
7.2 Installation on a wall console 17

8 Hydraulic installation 18
8.1 Design of the system 18
8.2 System piping 18
8.3 Suction and pressure valves 18
8.4 Connecting a leakage drain 19
8.5 Hydraulic accessories 19

9 Electric installation 21
9.1 Principles 21
9.2 Description of connection sockets 21

10 Control 24
10.1 Operating panel 24
10.2 General 24
10.3 Operating modes 24
10.4 Extended functions 25
10.5 The status of the pump 25
10.6 Error messages 26

11 Maintenance 28
11.1 Maintenance intervals 28
11.2 Change the oil 28
11.3 Tighten up dosing head bolt 29
11.4 Diaphragm replacement 29
11.5 Clean suction and pressure valves 29

12 Troubleshooting 30
12.1 Dosing pump not delivering or output too low 30
12.2 Dosing pump does not prime 30
12.3 Delivery rate varies 31
12.4 No stroke movement observed 31
12.5 Dosing pump delivery rate too high 31
12.6 Diaphragm is torn or tears regularly 31
12.7 Loud noises on the dosing pump 32
12.8 The drive is overloaded 32
12.9 Motor hums and does not start. 32

13 Spare parts 33
13.1 Diaphragm spare parts kits 33
13.2 Dosing head spare parts kits including valves 33

14 Delivery characteristic curves 34

15 EU Declaration of Conformity 35

16 Decontamination declaration 36

17 Warranty claim 37

18 Index 38

© Lutz-Jesco GmbH 2024
Subject to technical changes.
240507

1 Notes for the Reader

This operating manual contains information and behaviour rules for the safe and designated operation of the device.

Observe the following principles:

- read the entire operating instructions prior to inaugurating the device.
- Ensure that everyone who works with or on the device has read the operating manual and follows it.
- Maintain the operating manual throughout the service life of the device.
- Pass the operating manual on to any subsequent owner of the device.

1.1 General non-discrimination

In this operating manual, only the male gender is used where grammar allows gender allocation. The purpose of this is to make the text easy to read. Men and women are always referred to equally. We would like to ask female readers for understanding of this text simplification.

1.2 Explanation of the signal words

Different signal words in combination with warning signs are used in this operating manual. Signal words illustrate the gravity of possible injuries if the risk is ignored:

Signal word	Meaning
DANGER	Refers to imminent danger. Ignoring this sign may lead to death or the most serious injuries.
WARNING	Refers to a potentially hazardous situation. Failure to follow this instruction may lead to death or severe injuries.
CAUTION	Refers to a potentially hazardous situation. Failure to follow this instruction may lead to minor injury or damage to property.
NOTE	Refers to a danger which, if ignored, may lead to risk to the machine and its function.

Table 1: Explanation of the signal words

1.3 Explanation of the warning signs

Warning signs represent the type and source of a danger:

Warning sign	Type of danger
	Danger point
	Danger from electrical voltage
	Danger from corrosive substances
	Danger from automatic startup
	Danger of damage to machine or functional influences

Table 2: Explanation of the warning signs

1.4 Identification of warnings

Warnings are intended to help you recognise risks and avoid negative consequences.

This is how warnings are identified:

Warning sign	**SIGNAL WORD**

Description of danger.

Consequences if ignored.

⇨ The arrow signals a safety precaution to be taken to eliminate the danger.

1.5 Instruction for action identification

This is how pre-conditions for action are identified:

✓ Pre-condition for action which must be met before taking action.

🛠 A resource such as a tool or auxiliary materials required to perform the operating instructions.

This is how instructions for action are identified:

➔ Separate step with no follow-up action.

1. First step in a series of steps.

2. Second step in a series of steps.

▶ Result of the above action.

✓ **Action completed, aim achieved.**

© Lutz-Jesco GmbH 2024

2 Safety

2.1 General warnings

The following warnings are intended to help you eliminate the dangers that can arise while handling the device. Risk prevention measures always apply regardless of any specific action.

Safety instructions warning against risks arising from specific activities or situations can be found in the respective sub-chapters.

DANGER

Mortal danger from electric shock!

Wrongly connected or located cables or damaged ones can injure you.

- ⇨ Connect the device only to a SCHUKO socket outlet protected by a ground fault circuit interrupter (GFCI).
- ⇨ Replace damaged cables without delay.
- ⇨ Do not use extension cables.
- ⇨ Do not bury cables.
- ⇨ Secure cables to avoid being damaged by other equipment.

DANGER

Danger to life through explosions!

The use of dosing pumps without ATEX certification in a potentially explosive atmospheres can result in potentially-fatal explosions.

- ⇨ Never use the dosing pump in potentially explosive areas.

WARNING

Danger from unsuitable materials

The materials of the dosing pump and hydraulic parts of the system must be suitable for the dosing medium that is used. Should this not be the case, the dosing media may leak.

- ⇨ Make sure that the materials you are using are suitable for the dosing medium.
- ⇨ Make sure that the lubricants, adhesives, sealants, etc. that you use are suitable for the dosing medium.

WARNING

Danger of automatic start up!

After connecting the mains supply, residual dosing media in the dosing head can spray out.

- ⇨ Before connecting the mains supply, connect the dosing lines.
- ⇨ Check that all the screw connections have been tightened correctly and are leak-proof.

WARNING

Caustic burns or other burns through dosing media!

While working on the dosing head, valves and connections, you may come into contact with dosing media.

- ⇨ Use sufficient personal protective equipment.
- ⇨ Rinse the dosing pump with a liquid (e.g. water) which does not pose any risk. Ensure that the liquid is compatible with the dosing medium.
- ⇨ Release pressure in hydraulic parts.
- ⇨ Never look into open ends of plugged pipelines and valves.

CAUTION

Danger when changing the dosing medium!

Changing the dosing media can provoke unexpected reactions, damage to property and injury.

- ⇨ Clean the dosing pump and the system parts in contact with the media thoroughly before changing the dosing medium.

CAUTION

Increased risk of accidents due to insufficient qualification of personnel!

Dosing pumps and their accessories may only be installed, operated and maintained by personnel with sufficient qualifications. Insufficient qualification will increase the risk of accidents.

- ⇨ Ensure that all action is taken only by personnel with sufficient and corresponding qualifications.
- ⇨ Prevent access to the system for unauthorised persons.

NOTE

Do not dispose the device with household waste!

Do not dispose electrical devices with household waste.

- ⇨ Dispose the device and packaging material in accordance with local laws and regulations.
- ⇨ Dispose different materials separately and recycle them.

© Lutz-Jesco GmbH 2024
Subject to technical changes.
240507

2.2 Hazards due to non-compliance with the safety instructions

Failure to follow the safety instructions may endanger not only persons, but also the environment and the device.

The specific consequences can be:

- Failure of important functions of the device and of the corresponding system
- Failure of required maintenance and repair methods
- Danger to persons
- Danger to the environment caused by substances leaking from the system

2.3 Working in a safety-conscious manner

Besides the safety instructions specified in this operating manual, further safety rules apply and must be followed:

- Accident prevention regulations
- Safety and operating provisions
- Safety provisions for handling dangerous substances (mostly the safety data sheets to dosing media)
- Environmental protection provisions
- Applicable standards and legislation

2.4 Personal protective equipment

Based on the degree of risk posed by the dosing medium and the type of work you are carrying out, you must use corresponding protective equipment. Read the Accident Prevention Regulations and the Safety Data Sheets to the dosing media find out what protective equipment you need.

You will require the minimum of the following personal protective equipment:

Personal protective equipment required	
	Protective goggles
	Protective clothing
	Protective gloves

Table 3: Personal protective equipment required

Wear the following personal protective equipment when performing the following tasks:

- Commissioning
- Working on the dosing pump while running
- Shut-down
- Maintenance work
- Disposal

2.5 Personnel qualification

Any personnel who work on the device must have appropriate special knowledge and skills.

Anybody who works on the device must meet the conditions below:

- Attendance at all the training courses offered by the owner
- Personal suitability for the respective activity
- Sufficient qualification for the respective activity
- Training in how to handle the device
- Knowledge of safety equipment and the way this equipment functions
- Knowledge of this operating manual, particularly of safety instructions and sections relevant for the activity
- Knowledge of fundamental regulations regarding health and safety and accident prevention

All persons must generally have the following minimum qualification:

- Training as specialists to carry out work on the device unsupervised
- Sufficient training that they can work on the device under the supervision and guidance of a trained specialist

These operating instructions differentiate between these user groups:

© Lutz-Jesco GmbH 2024

2.5.1 Specialist staff

Thanks to their professional training, knowledge, experience and knowledge of the relevant specifications, specialist staff are able to perform the job allocated to them and recognise and/or eliminate any possible dangers by themselves.

2.5.2 Trained persons

Trained persons have received training from the operator about the tasks they are to perform and about the dangers stemming from improper behaviour.

2.5.3 Personnel tasks

In the table below you can check what qualifications are the pre-condition for the respective tasks. Only people with appropriate qualifications are allowed to perform these tasks!

Qualification	Activities
Specialist staff	■ Assembly ■ Hydraulic installation ■ Electric installation ■ Commissioning ■ Taking out of operation ■ Fault rectification ■ Maintenance ■ Repairs ■ Disposal
Trained persons	■ Storage ■ Transporting ■ Control ■ Fault rectification

Table 4: Personnel qualification

© Lutz-Jesco GmbH 2024
Subject to technical changes.
240507

3 Intended use

3.1 Notes on product warranty

Any non-designated use of the device can impair its function and the protection provided. This leads to invalidation of any warranty claims!

Please note that liability is on the side of the user in the following cases:

- The device is operated in a manner which is not consistent with these operating instructions, particularly safety instructions, handling instructions and the section "Intended Use".
- Information on usage and environment (see section 5 “Technical data” on page 12) is not adhered to.
- If people operate the device who are not adequately qualified to carry out their respective activities.
- No original spare parts or accessories of the Lutz-Jesco GmbH are used.
- Unauthorised changes are made to the device.
- The user uses different dosing media than those indicated in the order.
- The operating company uses the dosing media in conditions which have not been agreed with the manufacturer, such as changed concentrations, densities, temperatures or with impurities.
- Maintenance and inspection intervals are not adhered to as required or not adhered to at all.

3.2 Intended purpose

The device is intended for the following purpose only: the conveying and dosing of liquids.

3.3 Principles

- Comply with the information regarding the operating and environmental conditions (see chapter 5 “Technical data” on page 12).
- Any restrictions regarding the viscosity, temperature and density of dosing media must be followed. You must only use dosing media at temperatures above freezing point or below the boiling point of the respective medium.
- The materials of the dosing pump and hydraulic parts of the system must be suitable for the dosing medium that is used. Please note, the stability of the components can change as a result of operating pressure and media temperature.

> Information on the suitability of materials combined with different dosing media can be found in the Compatibility Chart of Lutz-Jesco GmbH.
> The information in this resistance list is based on information from the material manufacturers and on expertise obtained by Lutz-Jesco GmbH from handling the materials.
> As the durability of the materials depends on many factors, this list only constitutes initial guidance on selecting material. In all cases, test the equipment with the chemicals you use under operating conditions.

The dosing pump is not intended for outdoor use unless appropriate protective measures have been taken.

- Avoid leaks of liquids and dust into the casing and avoid direct exposure to sunlight.
- You must never operate dosing pumps in a potentially explosive atmosphere if they do not have corresponding nameplates or an appropriate EC Declaration of Conformity for potentially explosive atmospheres.

3.4 Prohibited dosing media

The device must not be used for the following media and substances:

- Gaseous media,
- Radioactive media,
- Solid substances,
- Combustible media,
- All other media that are not suitable for delivery using this device.

3.5 Foreseeable misuse

Below, there is information about the applications of the dosing pump or associated equipment that are not considered to be intended use. This section is intended to allow you to detect possible misuse in advance and to avoid it.

Foreseeable misuse is assigned to the individual stages of the product lifetime:

3.6 Incorrect assembly

- Unstable or unsuitable bracket
- Dosing pump bolted wrongly or loosely

3.6.1 Incorrect hydraulic installation

- Suction and pressure lines dimensioned incorrectly
- Unsuitable connection of the pipes due to wrong material or unsuitable connections.
- Suction and pressure lines mixed-up
- Damage to threads due to them being tightened too much
- Bending of pipelines
- No free return flow of the pressure relief valve
- Excessive demand due to the pressure differences between the suction and pressure valves.
- Through-suction at installation without back-pressure valves
- Damage due to undamped acceleration mass forces
- Exceeding the admissible pressure on the suction and discharge sides
- Using damaged parts

3.6.2 Incorrect electrical installation

- Connecting the mains voltage without a protective earth
- Unsecured mains or one that does not conform to standards
- Not possible to immediately or easily disconnect the power supply
- Wrong connecting cables for mains voltage
- Dosing pump accessories connected to wrong sockets
- Diaphragm monitoring not connected or defective
- Protective earth removed

© Lutz-Jesco GmbH 2024

3.6.3 Incorrect start-up

- Start-up with damaged system
- Shut-off valves closed at commissioning
- Closed suction or pressure line, e.g. due to blockages
- Personnel was not informed before the start-up
- System was recommissioned after maintenance without all the protective equipment and fixtures, etc. being reconnected.
- Inadequate protective clothing or none at all

3.6.4 Incorrect operation

- Protective equipment not functioning correctly or dismantled
- Modification of the dosing pump without authority
- Ignoring operational disturbances
- Elimination of operational disturbances by personnel without adequate qualifications.
- Deposits in the dosing head due to inadequate purging, particularly with suspensions
- Bridging the external fuse
- Operation made more difficult due to inadequate lighting or machines that are difficult to access
- Operation not possible due to dirty or illegible display of the dosing pump
- Delivery of dosing media for which the system is not designed
- Delivery of particulate or contaminated dosing media
- Inadequate protective clothing or none at all

3.6.5 Incorrect maintenance

- Carrying out maintenance during ongoing operation
- Carrying out work that is not described in the operating manual
- No adequate or regular inspection of correct functioning
- No replacement of damaged parts or cables with inadequate insulation
- No securing against reactivation during maintenance work
- Using cleaning materials that can cause reactions with the dosing media
- Inadequate cleaning of the system
- Unsuitable purging medium
- Unsuitable cleaning materials
- Detergents left in system parts
- Using unsuitable cleaning equipment
- Using the wrong spares or lubricants
- Contaminating the dosing medium with lubricant
- Installing spare parts without following the instructions in the operating manual
- Blocking venting orifices
- Pulling off sections of the plant
- Contamination at installation without a dirt trap
- Mixing up the valves
- Mixing up the sensor lines
- Not reconnecting all the lines
- Damaging or not installing all the seals
- Not renewing seals
- Not paying attention to safety data sheets
- Inadequate protective clothing or none at all

3.6.6 Incorrect decommissioning

- Not completely removing the dosing medium
- Dismantling lines while the dosing pump is running
- Device not disconnected from the power supply
- Using the wrong dismantling tools
- Inadequate protective clothing or none at all

3.6.7 Incorrect disposal

- Incorrect disposal of dosing media, operating resources and other materials
- No labelling of hazardous substances

© Lutz-Jesco GmbH 2024
Subject to technical changes.
240507

4 Product description

4.1 Properties

The MEMDOS LA is a motor-driven diaphragm dosing pump that is used when precise dosing results are required.

They are characterized by the following properties:

- Performance range of 4 – 1020 l/h with a backpressure of 16 – 3 bar
- Reproducible dosing precision of ± 2 %
- Operating modes: Manual and automatic operation
- Stroke frequency settable 0 – 100 % using the potentiometer
- Operation of the pump via the operating panel
- Signal LEDs for status, operating and error display
- Clearance input for external start/stop
- Analogue input and output: 0/4 – 20 mA
- Level input with main alarm
- Alarm relay output
- Stroke feedback output

4.2 Scope of delivery

Please compare the delivery note with the scope of delivery. The following items are part of the scope of delivery:

- Dosing pump MEMDOS LA
- 4 covering caps for electrical connections (mounted on the dosing pump)
- Mains cable
- Operating instructions
- Inspection report and test certificate (optional)
- Accessory kit (optional)

4.3 Structure of the dosing pump

4.3.1 General Overview

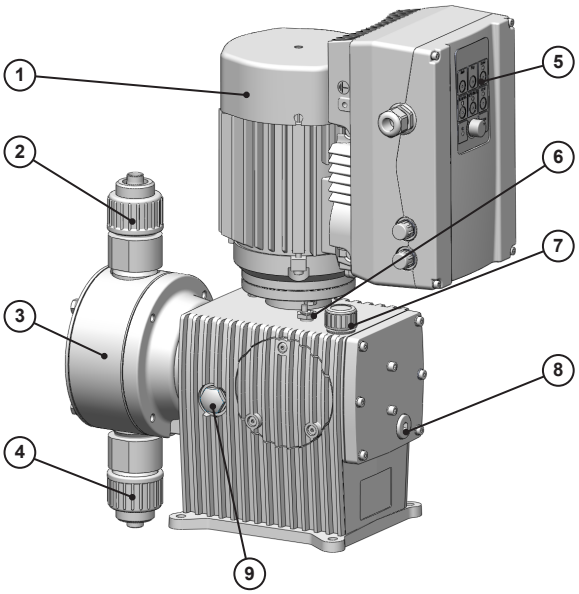

Fig. 1: Dosing pump overview MEMDOS LA

Item	Description
1	Drive motor
2	Valve and connection on the discharge side
3	Dosing head
4	Valve and connection on the suction side
5	Control box
6	Stroke sensor
7	Oil inlet and gearbox ventilation
8	Oil drain
9	Oil level glass

Table 5: Position numbers 1 – 9

© Lutz-Jesco GmbH 2024

4.3.2 Control elements

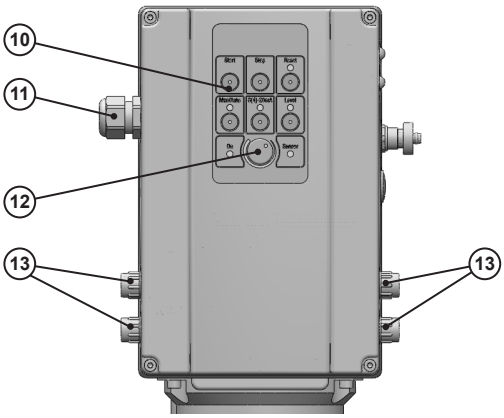

Fig. 2: Control elements

Item	Description
10	Multifunction buttons
11	Power supply connection
12	Potentiometer
13	Connection sockets for external operation or connecting accessories

Table 6: Position numbers 10 – 13

4.4 Function description

Dosing pumps are positive displacement pumps. They are used if precisely defined delivery of a medium is necessary. A constant volume per stroke or time is delivered.

The system delivers or meters the dosing medium by means of a repeated sequence of suction strokes followed by pressure strokes. This results in a pulsing flow.

If the dosing pump is in the suction stroke phase, the diaphragm is pulled into the rear final position. Due to the resulting vacuum in the dosing head, the pressure valve closes, the suction valve opens and dosing medium flows from the suction line into the dosing head.

If the dosing pump is in the pressure stroke phase, the diaphragm is moved into the front final position. Due to the pressure in the dosing head, the suction valve closes and the dosing medium flows through the pressure valve from the dosing head into the pressurised pipe.

4.5 Rating plate

The rating plate contains information on the safety and functional method of the product. The rating plate must be kept legible for the duration of the service life of the product.

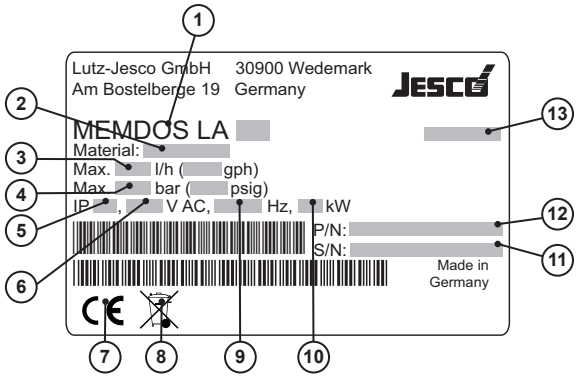

Fig. 3: Rating plate MEMDOS LA

No.	Description
1	Product, type, nominal size
2	Material of the dosing head/seals
3	Maximum delivery capacity
4	Maximum back pressure
5	Protection class
6	Voltage supply
7	Label showing conformity with applicable European directives
8	WEEE label
9	Frequency
10	Power consumption
11	Serial number
12	Part number
13	Month/year of manufacture

Table 7: Rating plate

© Lutz-Jesco GmbH 2024
Subject to technical changes.
240507

5 Technical data

5.1 Delivery capacity data

Please note that some of this data only represents guide values. The actual capacity of a dosing pump depends on various factors. For approximate values of the delivery capacity at different pressures, refer to chapter 14 “Delivery characteristic curves” on page 34.

5.1.1 MEMDOS LA 4 – 80, 150

Information		MEMDOS LA Size									
		4	4-HP	10	10-HP	20	20-HP	35	60	80	150
Delivery capacity at max. back-pressure	l/h	4	8.4	14	24	22	36	36	63	90	156
	ml/ stroke	2.6	5.4	3.2	5.6	3.1	5.0	8.3	8.8	20.8	21.7
Max. delivery pressure	bar	12	16	12	16	12	16	10	10	5	5
Max. stroke frequency	rpm	26	26	72	72	120	120	72	120	72	120
Suction lift for non-gassing media (with a filled suction line)	mWS	9	9	9	9	9	9	8	8	7	7

Table 8: Delivery capacity MEMDOS LA 4 – 80, 150

5.1.2 MEMDOS LA 110, 160 – 1010

Information		MEMDOS LA Size								
		110	160	210	260	310	400	510	760	1010
Delivery capacity at max. back-pressure	l/h	114	144	210	264	294	390	504	744	1020
	ml/ stroke	19.8	20.0	36.5	36.7	51.0	54.2	158.5	163.2	158.9
max. delivery pressure	bar	10	10	8	7	6	4.5	4	4	3
Max. stroke frequency	rpm	96	120	96	120	96	120	53	76	107
Suction lift for non-gassing media (with a filled suction line)	mWS	7	7	6	6	4.5	4.5	1	1	1

Table 9: Delivery capacity MEMDOS LA 110, 160 – 1010

© Lutz-Jesco GmbH 2024

5.2 Operating conditions and limits

Information		MEMDOS LA (all sizes)
Approved ambient temperature	°C	5 – 45 (with PVC components 5 – 40)*
Relative humidity	%	max. 90
Max. sound pressure level	dB (A)	57 – 65
Max. supply pressure	mbar	500
Viscosity limits	mPa·s	300**/1000***
Adjustable dosing range	%	0 – 100****

Table 10: Operating conditions and limits

* Use of the dosing pump at ambient temperatures below 5 °C must be checked individually. In such cases, please contact the manufacturer.

** With a viscosity of ~300 mPa·s and above, you must use spring-loaded valves.

*** If the viscosity is above 1000 mPa·s, this must be checked individually and the stroke frequency must be between 50 and 100 strokes/min.

**** 0 – 30 (40) % start/stop operation, 30 (40) – 100 % continuous speed adjustment. Values in brackets apply to 120 V version.

5.3 Approved media temperature

Information		MEMDOS LA (all sizes)
Dosing head made of PVC	°C	0 – 35
Dosing head made of PP	°C	0 – 60
Dosing head made of PVDF	°C	0 – 60
Dosing head made 1.4571	°C	0 – 80

Table 11: Approved media temperature

5.4 Other data

5.4.1 MEMDOS LA 4 – 80, 150

Information			MEMDOS LA Size									
			4	4-HP	10	10-HP	20	20-HP	35	60	80	150
Weight	dosing head made of PVC	kg	14.3								16.5	
	dosing head made of PP	kg	14.3								16.5	
	dosing head made of PVDF	kg	14.3								17.2	
	dosing head made of 1.4571	kg	15.9						16.4		21.5	
Diameter of diaphragm		mm	52						64		90	
Stroke length		mm	7.5						10			
Protection class			IP55									
Nominal valve width			DN4						DN6		DN10	

Table 12: Other data MEMDOS LA 4 – 80, 150

© Lutz-Jesco GmbH 2024
Subject to technical changes.
240507

5.4.2 MEMDOS LA 110, 160 – 1010

Information			MEMDOS LA Size								
			110	160	210	260	310	400	510	760	1010
Weight	dosing head made of PVC	kg	25.5		26		28		40.5		
	dosing head made of PP	kg	25.5		26		28		40.5		
	dosing head made of PVDF	kg	26.3		26.5		28.7		41.8		
	dosing head made of 1.4571	kg	30.7		33.1		39		61.5		
Diameter of diaphragm		mm	90		120		150		185		
Stroke length		mm	10						12.5		
Protection class			IP55								
Nominal valve width			DN10		DN15				DN25		

Table 13: Other data MEMDOS LA 110, 160 – 1010

5.5 Motor data

AC drive 120 V or 230 V

Information		MEMDOS LA Size		
		4 – 80, 150	110, 160 – 400	510 – 1010
Power output	kW	0.37	0.75	1.1
Speed	rpm	1500		
Nominal current	A	max. 4.5	max. 6.9	max. 9.2
Voltage	V 1~	120/230	120/230	208/230
Mains voltage		IEC 60033		
120 V (208 V) version		CSA and UL certified		
Frequency	Hz	50/60		
Operating mode		S1		
Protection class		IP55		
Insulation class		F		
Size		63	71	80
Flange Diameter	mm	90	105	120
Shaft	mm	11 x 23	14 x 30	19 x 40
Cooling		IC 411		
Electrical cable	m	1.8 m (with mains plug)		

Table 14: AC drive 120 V or 230 V

© Lutz-Jesco GmbH 2024

6 Dimensions

All dimensions in mm

6.1 MEMDOS LA 4 – 80, 150

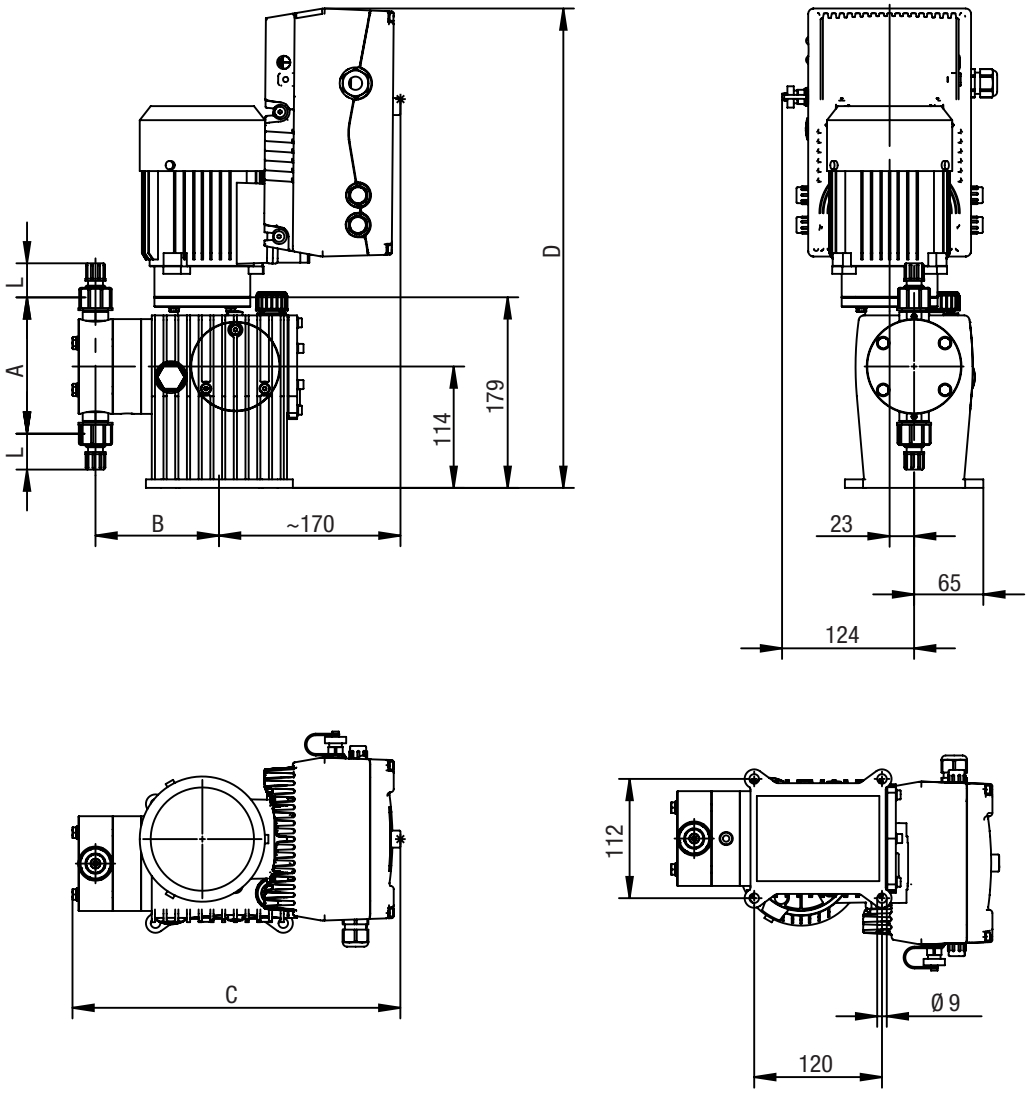

Fig. 4: Dimensioned drawing MEMDOS LA 4 – 80, 150

Scale	MEMDOS LA		
	4 – 20	**35 – 60**	**80, 150**
A	126	149	249
B	116	121.5	133
C	306.5	312	323.5
D	440		
L	Depends on the connection type and size		

Table 15: Dimensions MEMDOS LA 4 - 80, 150

6.2 MEMDOS LA 110, 160 – 1010

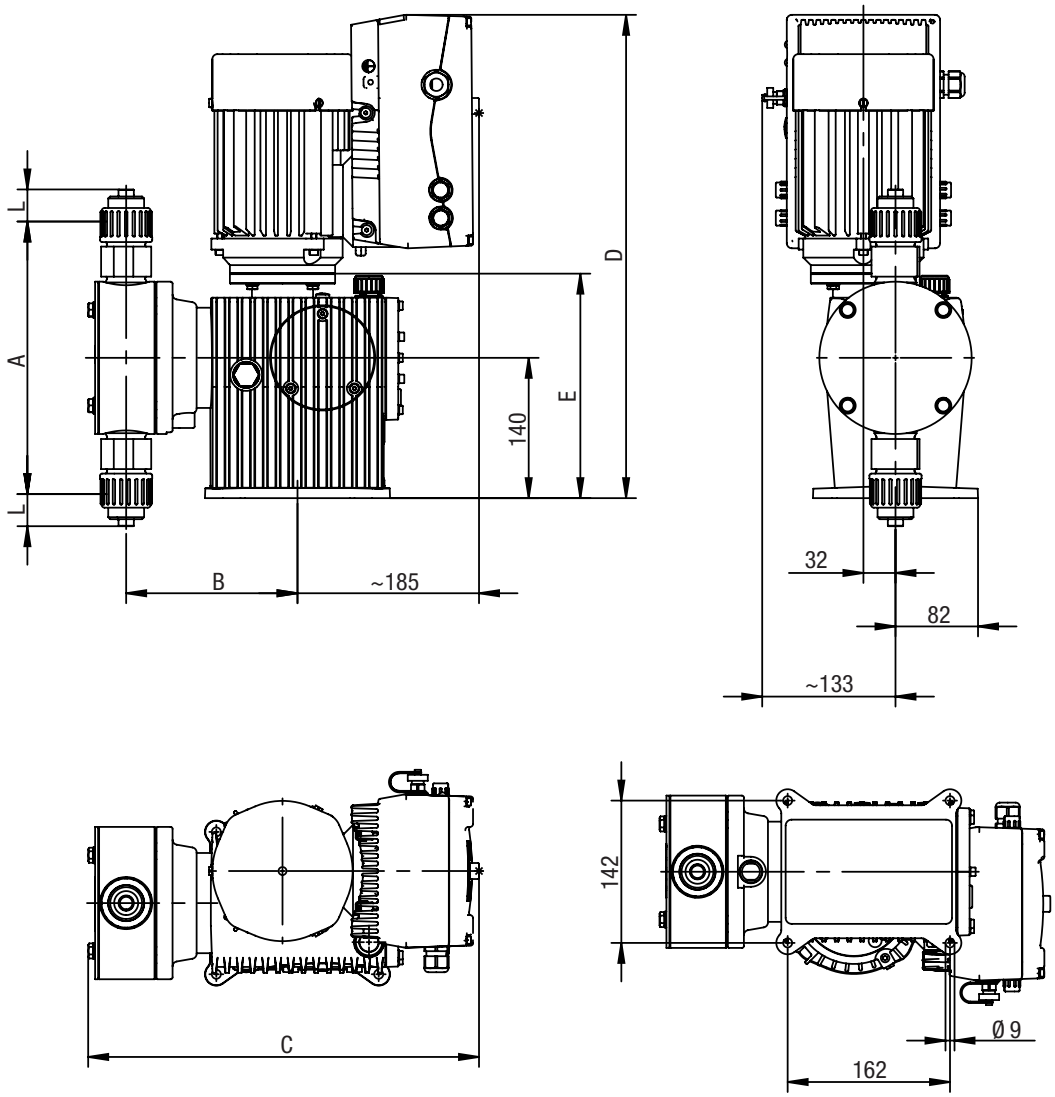

Fig. 5: Dimensioned drawing MEMDOS LA 110, 160 – 1010

Scale	MEMDOS LA			
	110, 160	210 – 260	310 – 400	510 – 1010
A	249	268	312.5	352
B	160	170	175	208
C	375	385	390	455
D	560			538
E	279			224
L	Depends on the connection type and size			

Table 16: Dimensions MEMDOS LA 110, 160 – 1010

© Lutz-Jesco GmbH 2024

7 Installing the Dosing Pump

DANGER

Mortal danger from electric shock!

Electrically conductive liquid can enter pump housings, cable screw connections and mains connectors.

⇨ Make sure that all protective measures comply at least with the requirements of protection class IP55.

⇨ Always set up the dosing pump such that water cannot enter the housing.

CAUTION

Danger of personal injury and material damage!

A dosing pump that is difficult to access represents a danger due to incorrect operation and faulty maintenance.

⇨ Install the dosing pump such that it is accessible at all times. Especially the oil level glass, the oil inlet and the oil drain.

7.1 Set up information

When installing, follow the basic principles below:

- The valves must be vertical: Pressure valve at top, suction valve at bottom. Observe the arrows which are found on the valves. The dosing head and the valves must be oriented so that the arrows point vertically upwards.
- You should install the dosing pump at a convenient height for operation.
- It must not be fitted to a wall without a wall console.
- It must not be installed under the ceiling.
- The frame of foundation for fixing the dosing pump must not be subjected to jolts. The pump must be vibration-free and stable.
- There must be enough free space in the area of the dosing head and the suction and pressure valves for these parts to be easily dismantled if required. The entire space requirement for installation and maintenance is approximately 1 m².
- The distance from the sides of the dosing pump to the wall or other dosing pumps or equipment must be at least 3 cm. Ensure a sufficient air flow for cooling purposes.
- The maximum ambient temperature must be complied with, see chapter 5.2 “Operating conditions and limits” on page 13. If necessary, radiant heat from surrounding equipment must be screened.
- Avoid exposure to direct sunlight.
- The dosing pump is not intended for use out of doors unless appropriate protective measures have been taken to prevent dust and water from entering the housing.
- For the dimensions of the fastening holes, refer to chapter 6 “Dimensions” on page 15.
- Install the dosing pump with the feet on a level surface.
- The tightening torque for the fastening bolts is 15 Nm.

7.2 Installation on a wall console

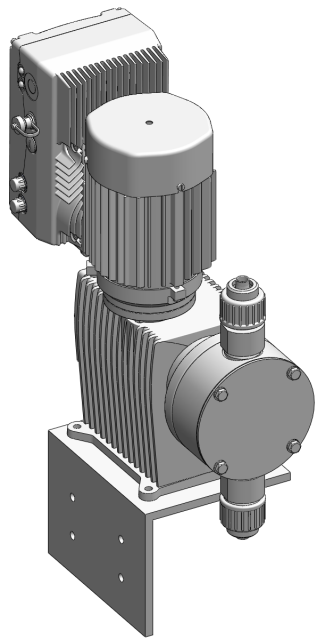

Fig. 6: Installation on a wall console

8 Hydraulic installation

In this chapter, you will find information about the hydraulic parts of a system that you should install or that can install additionally. In many cases, you must install hydraulic accessories to be able to use all the functions that the dosing pump MEMDOS LA offers, to guarantee functional safety or to achieve a high level of dosing precision.

WARNING

Caustic burns or other burns through dosing media!

A diaphragm rupture, blocked pressure lines or the use of material not suitable for the dosing medium can result in the discharge of dosing medium. Depending on the type and hazardousness of the dosing medium, this can result in injury.

⇨ Wear the recommended personal protective equipment.

⇨ Make sure that the materials you are using are suitable for the dosing medium.

⇨ Make sure that the lubricants, adhesives, sealants, etc. that you use are suitable for the dosing medium.

⇨ Install a leakage drain.

⇨ Install pressure relief valves.

CAUTION

Danger of personal injury and material damage!

High peak pressures can lead to piping vibrating and cause them to snap. This can result in injury from piping or escaping dosing media.

⇨ Install pulsation dampeners.

NOTE

Damage to drives due to overloading

The pressure conditions between the suction and discharge sides must be balanced; otherwise, overloading can result. This can lead to uncontrolled dosing processes, damage to the piping and to the dosing pump.

⇨ Ensure that the pressure on the discharge side is at least 1 bar than on the suction side.

NOTE

Locking of threads

Stainless steel and plastic parts (particularly those made of PVC) that are bolted together in a detachable connection (e.g. the dosing head and the valves) can lock. This makes them difficult to release.

⇨ Before bolting, grease the corresponding parts with a lubricant (e.g. PTFE spray). Ensure that the lubricant is compatible with the dosing medium.

8.1 Design of the system

- The dosing pumps technical data (see chapter 5 “Technical data” on page 12) must be taken into account and the plant s layout must be set up appropriately (e.g. pressure loss when rating the lines with regard to their nominal diameter and length).
- The entire system and its integrated dosing pump must be designed in such a way that an escaping dosing medium (due to the failure of wearing parts such as the diaphragm, or burst hoses) does not lead to permanent damage to system parts or the premises.
- The leakage opening of the dosing head must be visible so that you can detect a diaphragm rupture. It must be possible for the outflow from the leakage drain to be on a free downwards gradient.
- If you use hazardous dosing media, the installation must be designed such that no disproportionately high consequential damages arise due to dosing media escaping.
- To avoid dosing errors at the end of the process, the dosing pump must be locked electrically and hydraulically.
- To allow you to easily inspect the pressure conditions in the system, you should provide connections for pressure gauges close to the suction and pressure valves.

8.2 System piping

- The system piping must not exert any force on the connections and valves of the dosing pump.
- This means that steel piping should be connected to the dosing pump via flexible pipe sections.
- The nominal diameters of the pipework and the installed fittings should be rated the same as or greater than the nominal diameters of the dosing pump's suction and pressure valves.
- The suction line should be kept as short as possible.
- You should avoid intertwined hoses.
- Avoid loops, since air bubbles can collect.

8.3 Suction and pressure valves

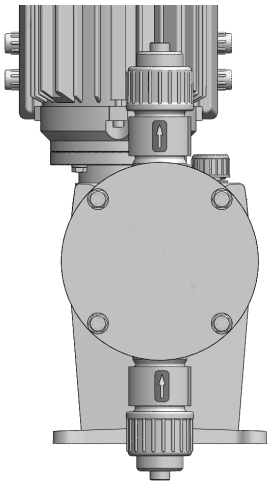

Fig. 7: Dosing head with suction and pressure valves

The suction and pressure valves are hydraulic connections to the dosing pump onto which the suction line or pressure line are attached.

© Lutz-Jesco GmbH 2024

These are double-ball bearing or spring-loaded valves which can only work properly when mounted in a vertical direction. The condition of the valves has a significant impact on the function and the dosing accuracy of the dosing pump.

All valves have arrows on them, these indicate the flow direction. These arrows must always point upwards.

For this reason, when connecting the dosing lines to the dosing pump, observe the alignment:

- Pressure valve above the dosing head,
- Suction valve under the dosing head.

8.4 Connecting a leakage drain

The products are produced to the highest quality standards and have a long service life. However, some parts are subject to operational wear. This is the case particularly with the diaphragms that are continuously subjected to forces during the suction and discharge strokes and to the effects of the dosing medium.

If a diaphragm ruptures, the dosing medium starts to leak. This leakage is drained via the leakage opening. There is an opening on the dosing head's flange for this purpose.

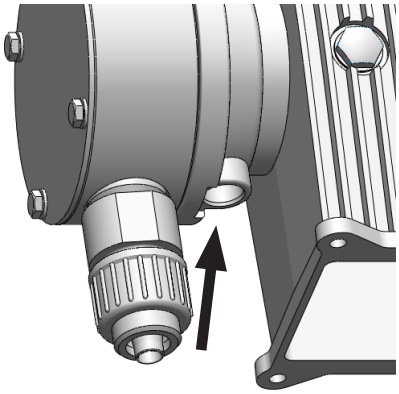

Fig. 8: Leakage drain opening

The use of a diaphragm rupture sensor is recommended.

NOTE

Damage to drives due to effervescent media

If a hose is connected to the leakage drain and it is routed back into the dosing tank, effervescent media can enter the drive and damage it.

⇨ Collect the leakage in a collecting pan.

⇨ As an alternative, you can route the leakage back to to the dosing tank using a funnel. You should install the funnel at an adequate distance from the leakage opening.

8.5 Hydraulic accessories

The following chapter is intended to give you an overview of installation options.

Please note that these operating manual are no substitute for the documentation supplied with the accessories. Comply with the safety instructions and all further instructions provided by the product documentation.

8.5.1 Injection nozzle

If the pressure line enters a main line, it is advisable to install an injection nozzle.

Injection nozzles have the following functions:

- Dosing the medium into a main line,
- Preventing flowback into the pressure line through a non-return valve.

Notes on assembly:

- Double-ball injection nozzles must be installed into the main line vertically from the bottom. You can install hose and spring-loaded injection nozzles any way you like.
- With dosing media that tend to crystallize, it is advisable to carry out installation into the main line from the bottom. This prevents air bubbles from being trapped.
- Some dosing media tend to soil the injection nozzle. This can result in blockages. In cases like this, it is advisable to install an injection nozzle that is easy to dismantle and block off.

When installing the injection nozzle, comply with the instructions provided in the operating manual.

8.5.2 Pressure-relief valve

Pressure relief valves have an important safety function for protecting the dosing pump and the associated pipes and fittings. The dosing pump can generate a pressure that is many times the rated one. A blocked pressure line can lead to dosing medium escaping.

An improperly high pressure can occur if:

- The shut-off valves are closed even though the dosing pump is running,
- Pipes block.

At an appropriate pressure, a pressure relief valve opens a bypass line and protects the system in this way from damage caused by over-pressure.

© Lutz-Jesco GmbH 2024
Subject to technical changes.
240507

Notes on assembly:

- The line for returning dosing medium from the pressure relief valve must be routed to the dosing tank or to a collecting pan.
- The pressure in the dosing tank must not be too high so that it is possible to accommodate the returned dosing medium.
- As an alternative, the system can return dosing medium into the suction line in front of the dosing pump. In this case, there must not be a non-return valve or a foot valve in the suction line.
- You should install the pressure relief valve as close as possible to the dosing head.

8.5.3 Back-pressure valve

Back-pressure control valves are necessary if:

- there are considerably fluctuating system pressures,
- the pressure on the suction side is higher than on the discharge side or if you intend to carry out dosing into depressurized lines.

In cases like this, if you do not use a back-pressure valve, imprecise dosing results will occur or overloading will result. The back-pressure valve solves these problems by generating a defined, constant backpressure.

8.5.4 Pulsation dampener

Pulsation dampeners have the following functions:

- Damping pulsating delivery flows for processes that require low-pulsation dosing,
- Reducing the throughflow resistance with long pipelines.

When installed on the suction side:

- Damping of acceleration mass forces and with this reduction of wear on the dosing pump.
- Preventing cavitation (pull-off of the liquid column) due to too high acceleration.

Pulsation dampers also perform important safety functions by preventing pressure peaks which cause the piping to vibrate and tear.

This problem can occur:

- with the high amplitudes of the vibrations,
- when using long pipes (the severity of the pulsation increases with the length of the pipe),
- when using rigid piping instead of elastic hoses.

Notes on assembly:

- You should carry out assembly in the direct vicinity of the location where you want to damp the pressure peaks (directly in front of the suction valve or directly behind the pressure valve).
- Pulsation dampeners should be installed with throttle valves or back-pressure valves installed directly behind them. By setting the valves appropriately, you can further-optimise damping of the pulsations.
- To prevent unnecessary pipe friction losses, you should lay the connecting line straight and in accordance with the rated width of the pulsation dampener.
- You must separately fasten relatively large pulsation dampeners and ones with hose connections.
- Pipelines must not transfer any mechanical tensions onto the pulsation dampener.

8.5.5 Priming aid

Priming aids are particularly advisable:

- in the case of dosing pumps with small volumetric displacements per stroke or with low stroke length settings,
- with high suction heights,
- with highly dense dosing media,
- at priming for the first time due to dry valves and air in the suction line and the dosing head,
- in dosing systems with frequent downtimes.

Further advantages resulting from priming aids:

- preventing cavitation in the suction line,
- gas removal,
- optical dosing control with small amounts,
- smoothing of the suction flow.

8.5.6 Level monitoring

Level monitoring of suction-side feeding of the dosing medium to prevent the tank being sucked dry and to ensure that it can be topped up again in good time.

8.5.7 Dosing of suspensions

When dosing suspensions, the dosing head must be rinsed regularly to prevent depositing. To do this, you install a feed line for the rinsing medium (water) in the suction side installation.

8.5.8 Suction pressure regulator

A suction pressure regulator may be necessary if the suction-side installation of the system produces a varying suction pressure or supply pressure:

- Dosing pumps that are installed above dosing tanks deliver less as the tank empties, since the suction head increases.
- Dosing pumps that are installed below dosing tanks deliver less as the tank empties, since the positive delivery pressure reduces.

Further problems that can occur:

- Greater wear on the dosing pump, e.g. diaphragm rupture due to the effects of heavy forces with particularly high tanks and high-density dosing media.
- Idling of the dosing tank in the case of a diaphragm rupture or pipe breakage.
- Impermissibly high forces in the pump transmission that occur when dosing pumps receive the dosing medium directly from the pressure line.
- Reduced performance or destruction of fittings due to cavitation with long suction lines.

The installation of a suction pressure regulator prevents these problems. The suction pressure regulator is opened by the dosing pump's suction pressure. This ensures that no dosing medium can flow if the dosing pump is not running or no vacuum can be generated following a pipe fracture.

Notes on assembly:

When using a large suction pressure regulator, you should provide a pulsation dampener on the suction side.

© Lutz-Jesco GmbH 2024

9 Electric installation

DANGER

Mortal danger from electric shock!

It must be possible to disconnect the dosing pump from the power supply immediately, in order to prevent dangers following an accident or a technical defect.

⇨ Install an emergency stop switch or integrate the dosing pump into the plant safety concept.

CAUTION

Danger of automatic start up!

The dosing pump does not have an ON/OFF switch and may start to pump as soon as it is connected to the mains supply.

⇨ Install an emergency stop switch or integrate the dosing pump into the plant safety concept.

NOTE

Damage due to incorrect mains voltage

The dosing pump can be damaged if you connect it to the wrong mains voltage.

⇨ Observe the information on the mains supply that is given on the rating plate.

NOTE

Insufficient electromagnetic compatibility

When you connect the dosing pump to a socket without an attached protective earth, it is not possible to guarantee the interference radiation and interference immunity according to EMC regulations.

⇨ Only connect the dosing pump to sockets with an attached protective earth.

9.1 Principles

- The electrical connection comply with local regulations.
- The dosing pump must be plugged into an outlet socket with a protective switch.
- To avoid dosing errors at the end of the process, the dosing pump must be locked electrically. The dosing pump must not be operated by switching the mains voltage on or off.
- Signal cables must not be laid parallel to high-voltage current lines or mains cables. You must route supply and signal lines in separate channels. An angle of 90° is required at line crossings.

9.2 Description of connection sockets

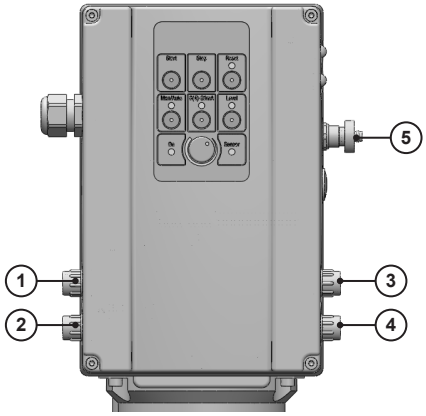

Fig. 9: Connection sockets 1 - 5

Connection	Input
1	Release input
2	Analogue input 0/4 – 20 mA
3	Level input

Table 17: Inputs of the control unit

Connection	Output
1	Stroke feedback output
2	Analogue output 0/4 – 20 mA
4	Fault reporting relay output

Table 18: Outputs of the control unit

Connection	Programming connection
5	Programming connection (for factory settings)

Table 19: Programming connection

© Lutz-Jesco GmbH 2024
Subject to technical changes.
240507

9.2.1 Connection socket 1

9.2.1.1 Stroke feedback

All strokes are registered in the pump via a separate stroke counter; this is outputted via the stroke feedback output.

The stroke feedback output is used to evaluate the signal in a PLC (stroke counting for batch mode). The signal can also be used to detect the pump run.

One contact is closed per stroke and a 24 V DC voltage signal is issued.

- Closer NO
- Short-circuit proof
- Load capacity: max. 20 mA

Pin	M12x1 (A-coded)	Assignments	Connection	Cable colour	
2		DIG OUT 1 (24 V out)	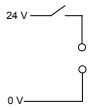	White	WH
1		GND		Brown	BN

Table 20: Connection socket 1

9.2.1.2 Release input

Using the Release input, it is possible to start or stop the dosing pump externally. The contact is open when not switched. 24 V DC are applied to pin 4. Connection with an external switch enables closure of the contact, thus withholding clearance.

- Closer NO
- I_{max} (with 24 V) = 3 mA
- Switching level high > 15 V D

Pin	M12x1 (A-coded)	Assignments	Connection	Cable colour	
3		DIG IN 1	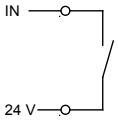	Blue	BU
4		24 V DC OUT		Black	BK

Table 21: Release input

9.2.2 Connection socket 2

9.2.2.1 Analog input

The analog input makes it possible to control the delivery capacity by means of a 0/4 – 20 mA signal.

The delivery capacity is regulated via the stroke frequency.

- 0/4 - 20 mA Signal
- Tolerance ± 2 %
- Working resistance: 500 ohms

Pin	M12x1 (A-coded)	Assignments	Connection	Cable colour	
2		(+) 0/4 – 20 mA		White	WH
3		Analogue (GND)		Blue	BU

Table 22: Analog input

9.2.2.2 Analogue output

The dosing pump relays an analogue signal via the analogue output; its current value behaves in proportion to the delivery capacity set. With 0% delivery capacity, 0 mA or 4 mA is registered. With 100% delivery capacity, the output signal amounts to 20 mA.

- 0 /4- 20 mA Signal
- Tolerance ± 2 %

Pin	M12x1 (A-coded)	Assignments	Connection	Cable colour	
1		0/4 – 20 mA	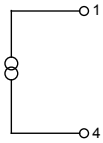	Brown	BN
4		Analogue (GND)		Black	BK

Table 23: Analogue output

© Lutz-Jesco GmbH 2024

9.2.3 Connection socket 3

9.2.3.1 Level input

The dosing pump can be connected with an external level contact (e.g. a suction line with a level switch) via the level input.

If the float falls with a falling level, a contact opens and the pump comes to a standstill.

The alarm relay is also switched and the level and alarm LEDs illuminate.

- I_{max} (with 24 V) = 3 mA
- Switching level high > 15 V DC

Pin	M12x1 (A-coded)	Assignments	Connection	Cable colour	
2		DIG IN 2	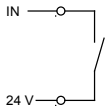	White	WH
3		24 V OUT		Blue	BU

Table 24: Level input

9.2.4 Connection socket 4

9.2.4.1 Alarm relay output

Faults of the dosing pump can be outputted via the alarm relay. An alarm LED lights up as soon as a fault is registered. The LED begins to flash once the fault has been remedied and the error can be cleared.

- Potential-free
- With an ohmic resistive load: max. 230 V AC, 2.5 A/max. 30 V DC, 2.5 A

Possible faults:

- Level switch (empty notification)
- Stroke sensor
- Cable break
- Motor overload
- Damage to motor
- Drive defective

Pin	M12x1 (B-coded)	Assignments	Connection	Cable colour	
1	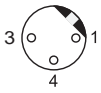	Break (NC) contact		Brown	BN
3		Make (NO) contact		Blue	BU
4		Changeover contact		Black	BK

Table 25: Alarm relay output

10 Control

10.1 Operating panel

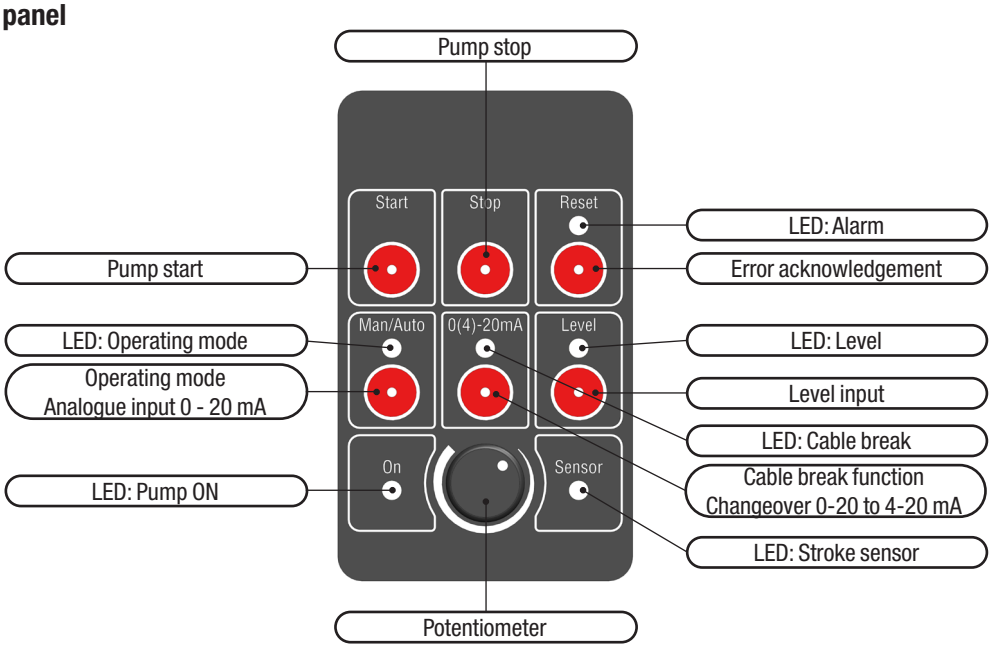

Fig. 10: Operating panel

10.2 General

- The pump must be restarted once the operating mode has been changed and the cable break function or the level input has been activated.
- The pump will not restart automatically after a error has been remedied and acknowledged. It must be restarted.
- If the pump was disconnected from the voltage supply in running operation, it restarts automatically once the voltage is returned.
- The Alarm LED is illuminated permanently if an error is registered. The LED begins to flash once the error has been remedied and must be cleared with *Reset*.
- The stroke sensor LED flashes whilst the pump is running. The LED illuminates once per stroke.
- The yellow LEDs *Man/Auto*, *(0)4-20mA* and *Level* only illuminated when switched.
- The pump implements the setting range 30 – 100% in an infinity adjustable fashion via the potentiometer or an external mA signal. In the range 0 – 30% the pump enters Start/Stop operation to achieve the desired delivery capacity.

10.3 Operating modes

The pump has two operating modes.

10.3.1 Manual operation

The pump is in manual operation as standard. The delivery capacity of the pump can be set between 0 and 100 % using the potentiometer. The pump can be started or stopped by pressing the *Start* or *Stop* key.

Precondition for action:

✓ The pump assembly and installation have been completed successfully.

Perform the following working steps:

1. Set the desired delivery capacity manually using the potentiometer.
2. Press *Start*.
   ▶ The On LED is lit.

✓ **The pump now runs in manual operation.**

10.3.2 Automatic operation

Pressing the *Man/Auto* key activates automatic operation. This enables the pump to be controlled via an external controller using an analogue signal between 0 – 20 mA.

Precondition for action:

✓ The pump assembly and installation have been completed successfully.

Perform the following working steps:

1. Press *Man/Auto* to change to automatic operation.
   ▶ The Man/Auto LED illuminates. The pump can now be controlled by an external controller.
2. Press *0(4)-20mA* to activate the cable break function in addition to automatic control.
   ▶ The analogue signal to the external control must be between 4 – 20 mA . If the signal falls under 2 mA, the pump stops, the alarm relay is switched and the alarm LED and the cable break LED will illuminate.
3. Press *Start*.
   ▶ The On LED is lit.

✓ **The pump is now running in automatic operation and is controlled externally.**

> The *0(4)-20mA* key will only function after automatic operation has been activated (analogue signal) and deactivates automatically after a change to manual operation.

 © Lutz-Jesco GmbH 2024

10.4 Extended functions

The pump has two additional functions.

10.4.1 Cable break

The cable break function detects a damaged control cable. The external current signal is not longer sent to the pump correctly.

In home position, the analogue input has a setting range of 0 – 20 mA. The *0(4)–20mA* key alters the setting range to 4 – 20 mA. If the current value of the incoming signal lies under 2 mA, the pump indicates a fault. The Alarm LED and the 0(4) – 20 mA-LED illuminate.

> The limit value was set to 2 mA, to avoid fluctuations in the error alarm current signal. The cable break function should be displayed before a complete interruption of the signal; the pump should stop.

Precondition for action:

✓ The pump assembly and installation have been completed successfully.

✓ Automatic operation was activated.

Perform the following working steps:

1. Install the line in accordance with section 9.2.2 “Connection socket 2” on page 22.
2. Press *0(4)–20mA*.
   ▶ The 0(4) – 20 mA-LED illuminates.
3. Press *Start*.

✓ **The pump is now ready for external control via a 4 – 20 mA signal.**

10.4.2 Level monitoring

You can connect an external level switch to the pump.

The level switch monitors the filling level of a container with dosing medium. If the container is empty, the level switch sends a signal to the pump. The pump stops an the alarm and level LED illuminate.

Precondition for action:

✓ The assembly and installation of the pump and level switch have been completed successfully.

Perform the following working steps:

1. Install the level switch line in accordance with section 9.2.3 “Connection socket 3” on page 23.
2. Press *Level*.
   ▶ The level LED illuminates.
3. Press *Start*.

✓ **The pump is now ready for level monitoring.**

10.5 The status of the pump

The current status of the pump can be read off from the operating panel.

Illuminated LED	Reason	Explanation
On	The pump has started.	The pump was started and runs in the operating mode selected.
On (Flashes)	The pump is in Start/Stop mode.	If the pump is set in the range 0 – 30 % the delivery capacity of the pump is altered via running and pause times. It no longer runs constantly.
On (Flashes quickly)	No external release any more.	The pump is stopped via the external clearance signal.
Sensor (Flashes)	The sensor LED flashes synchronously with every stroke.	The strokes can be read off from the sensor LED.

Table 26: The status of the pump

© Lutz-Jesco GmbH 2024
Subject to technical changes.
240507

10.6 Error messages

Error messages and malfunctions can be read in the operating panel.

LEDs illuminated	Reason	Consequence	Solution
(Flashes)	System backpressure too high.	The motor protection is activated and the motor stops.	■ Reduce the back pressure. ■ Then press *Reset* + *Start,* to restart the pump.
(Flashes)	The motor is too hot.	The motor protection is activated and the motor stops.	■ Allow the motor to cool. ■ Then press *Reset* + *Start,* to restart the pump.
(Flashes quickly)	Insufficient mains voltage.	The motor protection is activated and the motor stops.	■ Set the correct mains voltage. ■ Then press *Reset* + *Start,* to restart the pump.
+	Dosing medium container empty.	The motor stops.	■ Re-establish the dosing medium supply. ■ Then press *Reset* + *Start,* to restart the pump.
+	Analogue signal lower than 2 mA.	Motor stops.	■ Re-establish the connection to the external controller. ■ Then press *Reset* + *Start,* to restart the pump.

Table 27: Error messages

© Lutz-Jesco GmbH 2024

LEDs illuminated	Reason	Consequence	Solution
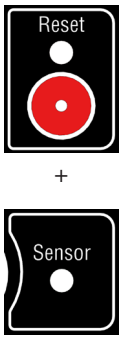	Damage to the gear.	Motor stops.	■ Replace the gears. ■ Consult the Lutz-Jesco GmbH service dept.
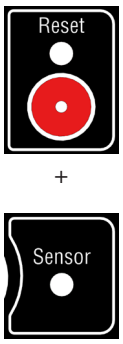	Proximity switch defective.	Motor stops.	■ Replace the proximity switch. ■ Consult the Lutz-Jesco GmbH service dept.

Table 27: Error messages

11 Maintenance

Dosing pumps by Lutz-Jesco are manufactured to the highest quality standards and have a long service life. However, some parts are subject to operational wear. This means that regular visual inspections are necessary to ensure a long operating life. Regular maintenance will protect the device from operation interruptions.

DANGER

Mortal danger from electric shock!

Live parts can inflict fatal injuries.

⇨ Before carrying out any maintenance work, always disconnect the device from the power supply.

⇨ Secure the system to prevent it from being switched on by accident.

⇨ The protective conductor (earth) may only be removed during the last step.

⇨ After maintenance work, all earthing measures must be restored.

11.1 Maintenance intervals

Subject the dosing pump to regular maintenance, to prevent malfunctions. This table gives you an overview of maintenance work and the intervals at which you must carry it out. The next few sections provide instructions for carrying out this work.

Interval	Maintenance
Regularly	■ Check the oil level in the oil level glass. ■ Check that piping is seated firmly ■ Clean suction and pressure valves ■ Check that electrical connections are not damaged ■ Tighten up dosing head bolts ■ Check diaphragm for leakage due to rupture ■ Check the dosing pump for unusual noises during operation, unusual temperatures or smells ■ Check servo motor
After 1 year	■ Or the first 5,000 operating hours: Oil change.
After 2 years	■ Or every 10,000 operating hours: Oil change.

Table 28: Maintenance intervals

11.2 Change the oil

Precondition for action:

✓ A suitable oil collecting tank is held ready.

🛠 Gear oil of the viscosity class ISO VG 460/SAE 140.

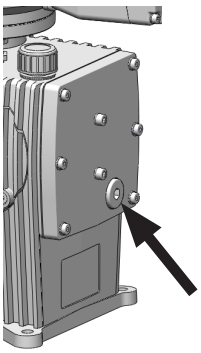

Fig. 11: Draining oil on the dosing pump

Perform the following working steps:

1. Unscrew the closing screw a from the oil drain c and remove the washer seal.
2. Completely drain the gear oil from the housing into oil collection container.
3. Place the washer seal on the oil drain and screw the closing screw.

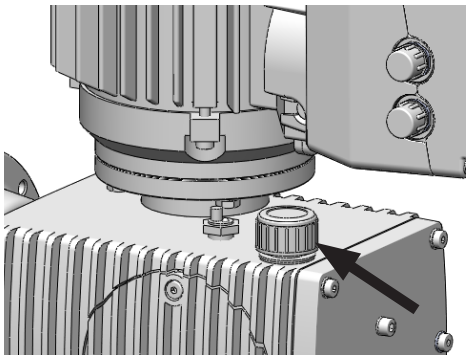

Fig. 12: Dosing pump oil inlet

4. Unscrew the closing screw a from the oil inlet and remove the washer seal.
5. Fill oil in the oil inlet. Check the oil level in the oil level glass at the same time. The oil level should reach to c. the middle of the oil level glass.

The following volumes are required:

MEMDOS LA	Filling volumes
4 – 80, 150	0.25 l
110, 160 – 1010	0.75 l

Table 29: Fill levels

© Lutz-Jesco GmbH 2024

11.3 Tighten up dosing head bolt

The torque needed for each MEMDOS LA type or the diaphragm size:

MEMDOS LA	Diaphragm diameter	Torque (± 10%)
4 – 20	52 mm	2 Nm
4-HP – 20-HP	52 mm	3 Nm
35 – 60	64 mm	3 Nm
80 – 160	90 mm	6 Nm
210 – 260	120 mm	6 Nm
310 – 400	150 mm	10 Nm
510 – 1010	185 mm	12 Nm

Table 30: Dosing head screw torque

11.4 Diaphragm replacement

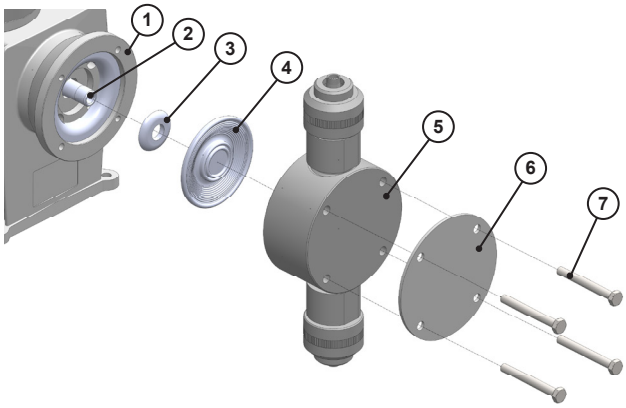

Fig. 13: Diaphragm replacement

Pre-conditions for actions:

✓ You have depressurised the hydraulic sections of the plant.

✓ You have rinsed the dosing pump using a safe medium (e.g. water).

Perform the following working steps:

1. Remove the four dosing head screws (7) with a suitable tool. Support the dosing head (5) whilst doing so and if necessary, the pressure plate (6), so that these parts do not fall.
2. Remove the dosing head and the pressure plate.

Install a new membrane

Pre-conditions for actions:

✓ Diaphragm rod (2), diaphragm flange (1) and any necessary support plate (3) were cleaned thoroughly and checked for damage and wear. Any remaining medium residue or surface damage could cause premature wear to the diaphragm.

✓ The diaphragm (4) thread was lightly greased (e.g. Molycote Longterm W2).

Perform the following working steps:

1. Push the support plate (if present) onto the threaded pin of the diaphragm with the curved side facing the diaphragm.
2. Screw the diaphragm to its fullest extent into the diaphragm rod in a clockwise direction together with the support plate.
3. Place the dosing head and the pressure plate (if present) in front of the diaphragm flange. Watch for the weight of the dosing head during large pumping types.
   Where necessary, support the dosing head at the correct height.
4. Lead the fixing screws through the drillholes in the dosing head and tighten them cross-wise. The torques are listed in Table 30 “Dosing head screw torque”.

✓ **Diaphragm change finished.**

11.5 Clean suction and pressure valves

Contaminated valves affect the dosing preceision and this means that you should clean the valves on a regular basis.

Suction and pressure valves differ in the sequence of assembly of the individual parts. Disassemble them one at a time to prevent parts being mixed up.

Finally, screw the valves at first finger-tight into the dosing head. Ensure that the seals or O-rings are correctly seated inside the valves and the dosing head.

WARNING

Danger from old seals!

If valves are serviced without replacing the seals, it can lead to leakage and to an eventual escape of the dosing media.

⇨ Replace the seals when maintaining the valves.

Required torque for tightening plastic valves into the dosing head:

MEMDOS LA	Torque (± 10%)
4 – 20	3 Nm
4-HP – 20-HP	3 Nm
35 – 60	5 Nm
80 – 260	15 Nm
310 – 400	15 Nm
510 – 1010	20 Nm

Table 31: Valve torque

For stainless steel valves with fibre seals or seals made of PTFE, the given torque values are the minimum values. Due to their elastic deformation, these must be re-tightened several times.

© Lutz-Jesco GmbH 2024
Subject to technical changes.
240507

12 Troubleshooting

See below for information about how to rectify faults on the device or the system. If you cannot eliminate the fault, please consult with the manufacturer on further measures or return the pump for repair.

12.1 Dosing pump not delivering or output too low

Possible cause	Measures for resolution
Valve leaking or blocked	■ Clean the valve and vent the dosing pump. ■ Tighten the screw connections.
Valve installed incorrectly	Reassemble the valve. Ensure that the valve balls are located above the valve seats.
Valve damaged (e.g. valve balls)	Remove the damaged parts or install a new valve.
Suction line is leaking	Seal the leak locations or replace the parts.
Suction line is blocked (e.g. screen in foot valve)	Clean the suction line.
Shut-off valves closed	Open the shut-off valves. Inspect the dosing pump for possible damage.
Suction lift too high.	■ Set the dosing pump to feed or reduce the suction head. ■ Install the pulsation dampener on the suction side. ■ Install a priming aid.
Viscosity too high	■ Possibly reduce the concentration of the dosing medium or increase the temperature. ■ Install spring-loaded valves. ■ Increase the pipe diameter.
Current supply interrupted	Reconnect the current supply
The technical data of the drive motor does not match that of the power supply.	Check the electrical installation.
Back pressure too high (on pressure-side connection).	■ Clean blocked injection nozzle. ■ Install pulsation damper to reduce pressure peaks resulting from over-long pipes. ■ Check function of safety valves.

Table 32: Dosing pump not delivering or output too low

12.2 Dosing pump does not prime

Possible cause	Measures for resolution
Valve leaking or blocked	■ Clean the valve and vent the dosing pump. ■ Tighten the screw connections.
Valve installed incorrectly	Reassemble the valve. Ensure that the valve balls are located above the valve seats.
Valve damaged (e.g. valve balls)	Remove the damaged parts or install a new valve.
Suction line is leaking	Seal the leak locations or replace the parts.
Suction line is blocked (e.g. screen in foot valve)	Clean the suction line.
Shut-off valves closed	Open the shut-off valves. Inspect the dosing pump for possible damage.
Suction lift too high.	■ Set the dosing pump to feed or reduce the suction head. ■ Install the pulsation dampener on the suction side. ■ Install a priming aid.
Viscosity too high	■ Possibly reduce the concentration of the dosing medium or increase the temperature. ■ Install spring-loaded valves. ■ Increase the pipe diameter.
Current supply interrupted	Reconnect the current supply
Dry the valves	■ Dampen the dosing head and the valves ■ Vent the dosing head.
Air in the suction line with simultaneous pressure on the pressure valve.	Vent the dosing head or the lines.

Table 33: Dosing pump does not prime

© Lutz-Jesco GmbH 2024

12.3 Delivery rate varies

Possible cause	Measures for resolution
Valve leaking or blocked	■ Clean the valve and vent the dosing pump. ■ Tighten the screw connections.
Valve damaged (e.g. valve balls)	Remove the damaged parts or install a new valve.
Suction line is leaking	Seal the leak locations or replace the parts.
Suction line is blocked (e.g. screen in foot valve)	Clean the suction line.
Viscosity too high	■ Possibly reduce the concentration of the dosing medium or increase the temperature. ■ Install spring-loaded valves. ■ Increase the pipe diameter.
The technical data of the drive motor does not match that of the power supply.	Check the electrical installation.
Pressure on suction side too high.	Install a back-pressure valve in the pressure line.
Pressure peaks due to acceleration with long lines.	■ Install a suction pressure regulator. ■ Install a pulsation damper.
Imprecise dosing due to changeable positive and negative suction heads.	Install a suction pressure regulator.
Back pressure too high (on pressure-side connection).	■ Clean blocked injection nozzle. ■ Install pulsation damper to reduce pressure peaks resulting from over-long pipes. ■ Check function of safety valves.

Table 34: Delivery rate varies

12.4 No stroke movement observed

Possible cause	Measures for resolution
Diaphragm return spring broken.	Contact the manufacturer.
Current supply interrupted	Reconnect the current supply
The technical data of the drive motor does not match that of the power supply.	Check the electrical installation.

Table 35: No stroke movement observed

12.5 Dosing pump delivery rate too high

Possible cause	Measures for resolution
Pressure on suction side too high.	Install a back-pressure valve in the pressure line.
Pressure peaks due to acceleration with long lines.	■ Install a suction pressure regulator. ■ Install a pulsation damper.

Table 36: Dosing pump delivery rate too high

12.6 Diaphragm is torn or tears regularly

Possible cause	Measures for resolution
Shut-off valves closed	Open the shut-off valves. Inspect the dosing pump for possible damage.
Pressure peaks due to acceleration with long lines.	■ Install a suction pressure regulator. ■ Install a pulsation damper.
The materials are not suitable for the dosing medium being used	Check the resistance of the materials.
Diaphragm not screwed up to the end stop on the diaphragm rod	Screw a new diaphragm up to the end stop. On MEMDOS LA 4 – 80, the support plate must be clamped firmly between diaphragm and diaphragm rod.
Back pressure too high (on pressure-side connection).	■ Clean blocked injection nozzle. ■ Install pulsation damper to reduce pressure peaks resulting from over-long pipes. ■ Check function of safety valves.
Media sediment in dosing head.	Clean the dosing head.

Table 37: Diaphragm is torn or tears regularly

© Lutz-Jesco GmbH 2024
Subject to technical changes.
240507

12.7 Loud noises on the dosing pump

Possible cause	Measures for resolution
Roller bearing defective.	Contact the manufacturer.

Table 38: Loud noises on the dosing pump

12.8 The drive is overloaded

Possible cause	Measures for resolution
Shut-off valves closed	Open the shut-off valves. Inspect the dosing pump for possible damage.
The technical data of the drive motor does not match that of the power supply.	Check the electrical installation.
Pressure peaks due to acceleration with long lines.	■ Install a suction pressure regulator. ■ Install a pulsation damper.
Back pressure too high (on pressure-side connection).	■ Clean blocked injection nozzle. ■ Install pulsation damper to reduce pressure peaks resulting from over-long pipes. ■ Check function of safety valves.

Table 39: The drive is overloaded

12.9 Motor hums and does not start.

Possible cause	Measures for resolution
The technical data of the drive motor does not match that of the power supply.	Check the electrical installation.
Back pressure too high (on pressure-side connection).	■ Clean blocked injection nozzle. ■ Install pulsation damper to reduce pressure peaks resulting from over-long pipes. ■ Check function of safety valves.
No or insufficient oil in the gearbox	Fill up the gearbox oil.

Table 40: Motor hums and does not start.

© Lutz-Jesco GmbH 2024

13 Spare parts

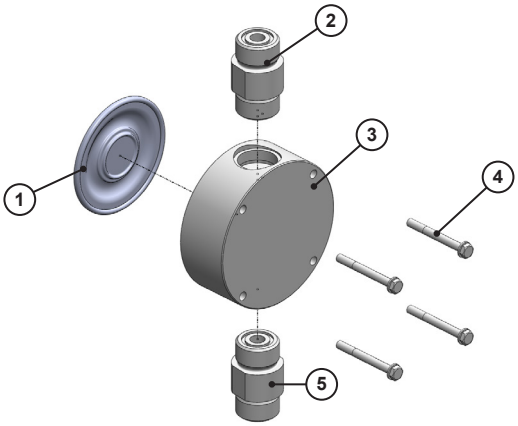

Fig. 14: Spare parts

Required sets for a complete service:

- 1 diaphragm spare parts kit
- 1 dosing head spare parts kit

13.1 Diaphragm spare parts kits

Diaphragm spare parts set containing:

- 1diaphragm (item 1)
- 1 set of dosing head screws (item 4)

Type	Part no.
LA 4, LA 10, LA 20	40356
LA 35, LA 60	40357
LA 80, LA 110, LA 150, LA 160	40358
LA 210, LA 260	40359
LA 310, LA 400	40360
LA 510, LA 760, LA 1010	40361

Table 41: Diaphragm spare parts kits

13.2 Dosing head spare parts kits including valves

Dosing head spare parts kit containing:

- Dosing head (item 3)
- 1 set of dosing head screws (item 4)
- Pressure valve (item 2)
- Suction valve (item 5)

Spare parts kits in numerous material combinations can be found in Lutz-Jesco's current price list.

© Lutz-Jesco GmbH 2024
Subject to technical changes.
240507

14 Delivery characteristic curves

This section is intended to give you an idea of the delivery capacity that the dosing pump can achieve at specific back pressures. These delivery capacities were determined on the manufacturer's test stands. They apply at 20 °C (68 °F) for water, at 100 % stroke frequency. The delivery capacity depends on the medium (density and viscosity) and temperature. Since these conditions differ at every location of usage, the delivery capacity of the dosing pump should be measured by gauging it at the operating company's installation.

At 60 Hz operation, values are increased by a factor of 1.2.

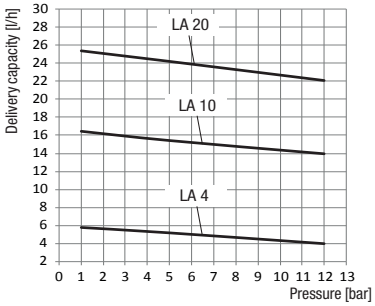

MEMDOS LA 4 – 20

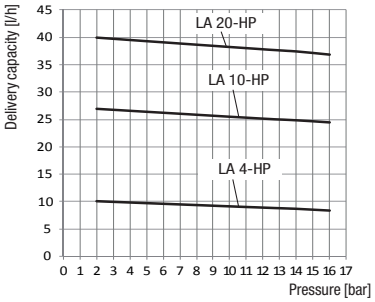

MEMDOS LA 4-HP – 20-HP

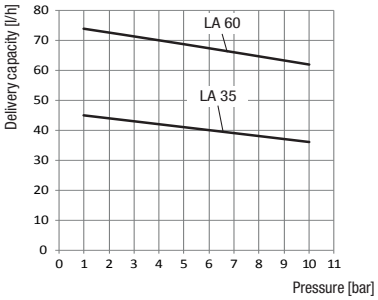

MEMDOS LA 35 – 60

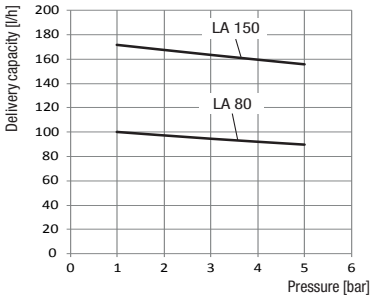

MEMDOS LA 80 – 150

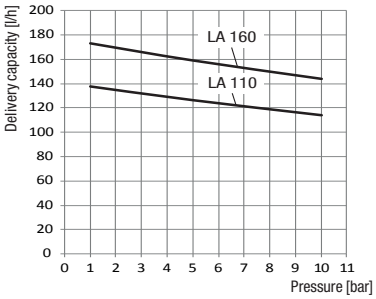

MEMDOS LA 110 – 160

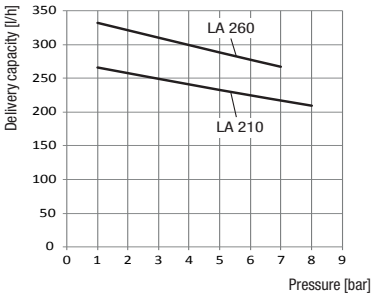

MEMDOS LA 210 – 260

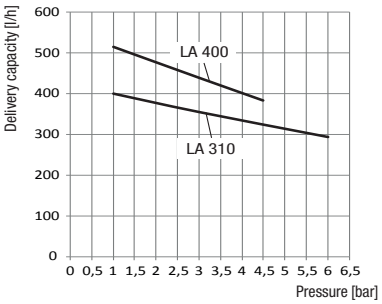

MEMDOS LA 310 – 400

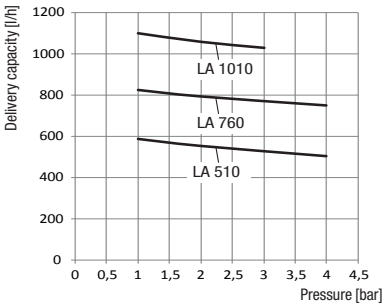

MEMDOS LA 510 – 1010

© Lutz-Jesco GmbH 2024

15 EU Declaration of Conformity

(DE) EU-Konformitätserklärung
Hiermit erklären wir, dass das nachfolgend bezeichnete Gerät aufgrund seiner Konzipierung und Bauart sowie in der von uns in Verkehr gebrachten Ausführung den einschlägigen grundlegenden Sicherheits- und Gesundheitsanforderungen der aufgeführten EG-Richtlinien entspricht. Bei einer nicht mit uns abgestimmten Änderung am Gerät verliert diese Erklärung ihre Gültigkeit.

(EN) EU Declaration of Conformity
We hereby certify that the device described in the following complies with the relevant fundamental safety and sanitary requirements and the listed EC regulations due to the concept and design of the version sold by us.
If the device is modified without our consent, this declaration loses its validity.

(FR) Déclaration de conformité UE
Nous déclarons sous notre propre responsabilité que le produit ci-dessous mentionné répond aux exigences essentielles de sécurité et de santé des directives CE énumérées aussi bien sur le plan de sa conception et de son type de construction que du modèle que nous avons mis en circulation.
Cette déclaration perdra sa validité en cas d'une modification effectuée sur le produit sans notre accord explicite.

(ES) Declaración de conformidad UE
Por la presente declaramos que, dados la concepción y los aspectos constructivos del modelo puesto por nosotros en circulación, el aparato mencionado a continuación cumple con los requisitos sanitarios y de seguridad vigentes de las directivas de la U.E. citadas a continuación.
Esta declaración será invalidad por cambios en el aparato realizados sin nuestro consentimiento.

(NL) EU-overeenstemmingsverklaring
Ondergetekende Lutz-Jesco GmbH, bevestigt, dat het volgende genoemde apparaat in de door ons in de handel gebrachte uitvoering voldoet aan de eis van, en in overeenstemming is met de EU-richtlijnen, de EU-veiligheidsstandaard en de voor het product specifieke standaard. Bij een niet met ons afgestemde verandering aan het apparaat verliest deze verklaring haar geldigheid.

(PT) Declaração de conformidade UE
Declaramos pelo presente documento que o equipamento a seguir descrito, devido à sua concepção e ao tipo de construção daí resultante, bem como a versão por nós lançada no mercado, cumpre as exigências básicas aplicáveis de segurança e de saúde das directivas CE indicadas.
A presente declaração perde a sua validade em caso de alteração ao equipamento não autorizada por nós.

Bezeichnung des Gerätes:	Motor-Membrandosierpumpe
Description of the unit:	Motor-driven diaphragm dosing pump
Désignation du matériel:	Pompe doseuse à membrane entraînée par moteur
Descripción de la mercancía:	Bomba dosificadora de membrana accionada por motor
Omschrijving van het apparaat:	Motor-membraandoseerpomp
Designação do aparelho:	Bomba doseadora de membrana a motor
Typ: **Type:**	MEMDOS LA 4 – 1010, MEMDOS LA 4-HP – 20-HP, MEMDOS LA-Net 4 – 1010
EG-Richtlinien: **EC directives:**	2006/42/EG, 2014/30/EU, 2014/35/EG Die Schutzziele der Niederspannungsrichtlinie 2014/35/EG wurden gemäß Anhang I, Nr. 1.5.1 der Maschinenrichtlinie 2006/42/EG eingehalten. The protective aims of the Low Voltage Directive 2014/35/EU were adhered to in accordance with Annex I, No. 1.5.1 of the Machinery Directive 2006/42/EC.
Harmonisierte Normen: **Harmonized standards:**	DIN EN ISO 12100:2011-03 DIN EN 809:2012-10 DIN EN 61000-6-2:2005 DIN EN 61000-6-3:2007 + A1:2011
Dokumentationsbevollmächtigter: **Authorized person for documentation:**	Lutz-Jesco GmbH

Heinz Lutz
Geschäftsführer / Chief Executive Officer
Lutz-Jesco GmbH
Wedemark, 01.04.2016

Lutz-Jesco GmbH
Am Bostelberge 19
30900 Wedemark
Germany

© Lutz-Jesco GmbH 2024
Subject to technical changes.
240507

16 Decontamination declaration

Please copy the declaration, stick it to the outside of the packaging and return it with the device.

Decontamination declaration

Please fill out a separate form for each appliance!

We forward the following device for repairs:

Device and device type: ..... Part-no.: .....

Order No.: ..... Date of delivery: .....

Reason for repair: .....

.....

.....

Dosing medium

Description: ..... Irritating: ☐ Yes ☐ No

Properties: ..... Corrosive: ☐ Yes ☐ No

We hereby certify, that the product has been cleaned thoroughly inside and outside before returning, that it is free from hazardous material (i.e. chemical, biological, toxic, flammable, and radioactive material) and that the lubricant has been drained.

If the manufacturer finds it necessary to carry out further cleaning work, we accept the charge will be made to us.

We assure that the aforementioned information is correct and complete and that the unit is dispatched according to the legal requirements.

Company / address: ..... Phone: .....

..... Fax: .....

..... Email: .....

Customer No.: ..... Contact person: .....

Date, Signature: .....

© Lutz-Jesco GmbH 2024

17 Warranty claim

Warranty claim

Please copy and send it back with the unit!

If the device breaks down within the period of warranty, please return it in a cleaned condition with the complete warranty claim.

Sender

Company: ..... Phone: ..... Date: .....

Address: .....

Contact person: .....

Manufacturer order no.: ..... Date of delivery: .....

Device type: ..... Serial number: .....

Nominal capacity / nominal pressure: .....

Description of fault: .....

.....

.....

.....

.....

.....

.....

.....

Service conditions of the device

Point of use / system designation: .....

.....

.....

Accessories used (suction line etc.): .....

.....

.....

.....

.....

Commissioning (date): .....

Duty period (approx. operating hours): .....

Please describe the specific installation and enclose a simple drawing or picture of the chemical feed system, showing materials of construction, diameters, lengths and heights of suction and discharge lines.

© Lutz-Jesco GmbH 2024
Subject to technical changes.
240507

18 Index

A
AC drive 14
Automatic operation 24

C
Cable break 25
connection ports 21
Control 24
Control box
- Control elements 11
- Error messages 26
- Operating panel 24

D
Delivery characteristic curves 34
Dimensioned drawings 15
Dimensions 15
Dosing media
- Prohibited dosing media 8

E
EC Declaration of Conformity 35
Electrics 21

F
Foreseeable misuse 8

G
General warnings 5

H
Handling instructions
- Marking 4

Hazards due to non-compliance with the safety instructions 6
Hydraulics 18

I
Intended purpose 8
Intended use 8

L
Leakage drain 19
Level monitoring 25

M
Maintenance 28
- Change the oil 28
- Diaphragm replacement 29
- Maintenance intervals 28

Manual operation 24
Motor 14

N
Notes for the Reader 4

O
Operating modes 24

P
Personnel qualification 6
Personnel tasks 7
Pressure valve 18
- Cleaning 29

Product description 10
Product warranty 8
Prohibited dosing media 8

R
Rating plate 11

S
Safety 5
Scope of delivery 10
Signal words
- Explanation 4

Spare parts 33
Specialist staff 7
Structure of the device 10
Suction valve 18
- Cleaning 29

T
Technical data 12
Trained persons 7
Troubleshooting 30

W
Warnings
- General warnings 5
- Marking 4

Warning sign
- Explanation 4

Warranty claim 37
Working in a safety-conscious manner 6

 © Lutz-Jesco GmbH 2024

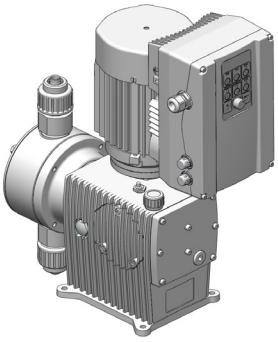

Lutz-Jesco GmbH

Am Bostelberge 19
D-30900 Wedemark

Phone: +49 5130 5802-0
info@lutz-jesco.com
www.lutz-jesco.com

Operating instructions
C 7524

Copyright 2024 by Lutz-Jesco GmbH