Solenoid-diaphragm dosing pump
MAGDOS LB
Operating instructions

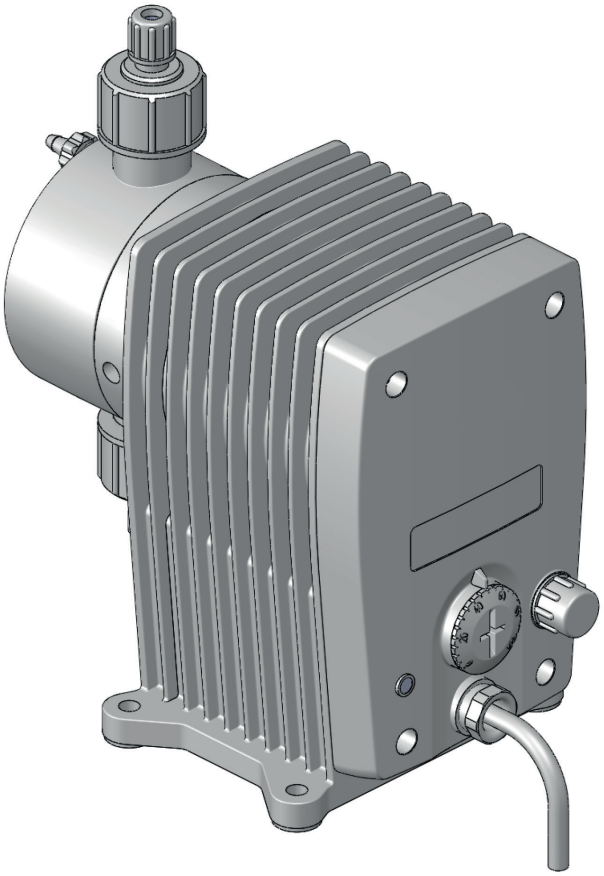

Read the operating manual!

The user is responsible for installation and operation related mistakes!

Original operating instructions

© Lutz-Jesco GmbH 2022

BA-10211-02-V13

Dosing Conveying Control | Liquids Gases Systems

Table of Contents

1 Notes for the Reader 4
1.1 General non-discrimination 4
1.2 Explanation of the signal words 4
1.3 Explanation of the warning signs 4
1.4 Identification of warnings 4
1.5 Identification of action instructions 4

2 Safety 5
2.1 General warnings 5
2.2 Hazards due to non-compliance with the safety instructions 6
2.3 Working in a safety-conscious manner 6
2.4 Personal protective equipment 6
2.5 Personnel qualification 6

3 Intended use 8
3.1 Notes on product warranty 8
3.2 Intended purpose 8
3.3 Device revision 8
3.4 Principles 8
3.5 Prohibited dosing media 8
3.6 Foreseeable misuse 8

4 Product description 10
4.1 Properties 10
4.2 Scope of delivery 10
4.3 Structure of the dosing pump 10
4.4 Function description 11
4.5 Rating plate 11

5 Technical data 12
5.1 Delivery capacity data 12
5.2 Operating conditions and limits 12
5.3 Electrical specifications 13
5.4 Other data 13

6 Dimensions 14

7 Installing the Dosing Pump 15
7.1 Set up information 15
7.2 Installation examples 15

8 Hydraulic installations 16
8.1 Design of the system 16
8.2 System piping 16
8.3 Aligning the dosing head 17
8.4 Hydraulic connections 17
8.5 Connecting a leakage drain 18
8.6 Connecting the dosing head venting facility 18
8.7 Hydraulic accessories 19

9 Electrical installation 21
9.1 Principles 21
9.2 Conductive rubber band 21
9.3 Description of the connection sockets 22
9.4 Assignment of the connection port 22

10 Operation 23
10.1 Commissioning the dosing pump 23
10.2 Signal LED 24
10.3 External On / Off via Release input 24
10.4 Decommissioning the dosing pump 24
10.5 Shutting down in an emergency 24
10.6 Storage 24
10.7 Transportation 24
10.8 Disposal of old equipment 24

11 Maintenance 25
11.1 Maintenance intervals 25
11.2 Tighten up dosing head bolts 25
11.3 Change the diaphragm 25
11.4 Clean suction and pressure valves 26

12 Troubleshooting 27
12.1 Dosing pump not delivering or output too low 27
12.2 Dosing pump does not prime 27
12.3 Delivery rate varies 27
12.4 No stroke movement observed 28
12.5 Dosing pump delivery rate too high 28
12.6 Diaphragm is torn or tears too often 28
12.7 Loud noises on the dosing pump 28

13 Spare parts 29
13.1 Diaphragm spare parts kits 29
13.2 Dosing head spare parts kits including valves 29

14 Delivery characteristic curves 30

15 EU Declaration of Conformity 31

16 Declaration of no objection 32

17 Warranty claim 33

18 Index 34

© Lutz-Jesco GmbH 2022
Subject to technical changes.
220121

1 Notes for the Reader

These Operating instructions contain information and behaviour rules for safe and designated operation of the dosing pump MAGDOS LB.

Observe the following principles:

- Read the entire operating manual prior to starting-up the device.
- Ensure that everyone who works with or on the dosing pump has read the operating instructions and follows them.
- Keep the operating instructions for the entire service life of the dosing pump.
- Pass on the operating instructions to any subsequent owner of the dosing pump.

1.1 General non-discrimination

In this operating manual, only the male gender is used where grammar allows gender allocation. The purpose of this is to make the text easy to read. Men and women are always referred to equally. We would like to ask female readers for understanding of this text simplification.

1.2 Explanation of the signal words

Different signal words in combination with warning signs are used in this operating manual. Signal words illustrate the gravity of possible injuries if the risk is ignored:

Signal word	Meaning
DANGER	Refers to imminent danger. Ignoring this sign may lead to death or the most serious injuries.
WARNING!	Refers to a potentially hazardous situation. Failure to follow this instruction may lead to death or severe injuries.
CAUTION!	Refers to a potentially hazardous situation. Failure to follow this instruction may lead to minor injury or damage to property.
PLEASE NOTE	Refers to a danger which, if ignored, may lead to risk to the machine and its function.

Tab. 1: Explanation of the signal words

1.3 Explanation of the warning signs

Warning signs represent the type and source of a danger:

Warning sign	Type of danger
	General danger zone
	Danger of electric shock
	Danger of caustic or other burns
	Danger of electromagnetic radiation
	Danger of automatic start up
	Danger of damage to machine or functional influences

Tab. 2: Explanation of the warning signs

1.4 Identification of warnings

Warnings are intended to help you recognise risks and avoid negative consequences.

This is how warnings are identified:

Warning sign	SIGNAL WORD
Description of danger. Consequences if ignored. ⇨ The arrow signals a safety precaution to be taken to eliminate the danger.	

1.5 Identification of action instructions

This is how pre-conditions for action are identified:

✓ Pre-condition for action which must be met before taking action.

🛠 A resource such as a tool or auxiliary materials required to perform the operating instructions.

This is how instructions for action are identified:

➔ Separate step with no follow-up action

1. First step in a series of steps

2. Second step in a series of steps

▸ Result of the above action

✓ **Action completed, aim achieved**

© Lutz-Jesco GmbH 2022

2 Safety

2.1 General warnings

The following warnings are intended to help you to eliminate the dangers that can arise while handling the dosing pump. Risk prevention measures always apply regardless of any specific action.

Safety instructions warning against risks arising from specific activities or situations can be found in the respective sub-chapters.

DANGER

Mortal danger from electric shock!

Wrongly connected or located cables or damaged ones can injure you.

- ⇨ Connect the device only to a SCHUKO socket outlet protected by a ground fault circuit interrupter (GFCI).
- ⇨ Replace damaged cables without delay.
- ⇨ Do not use extension cables.
- ⇨ Do not bury cables.
- ⇨ Secure cables to avoid being damaged by other equipment.

DANGER

Danger to life through explosions!

The use of dosing pumps without ATEX certification in a potentially explosive atmospheres can result in potentially-fatal explosions.

- ⇨ Never use the dosing pump in potentially explosive areas.

WARNING!

Danger from unsuitable materials

The materials of the dosing pump and hydraulic parts of the system must be suitable for the dosing medium that is used. Should this not be the case, the dosing media may leak.

- ⇨ Make sure that the materials you are using are suitable for the dosing medium.
- ⇨ Make sure that the lubricants, adhesives, sealants, etc. that you use are suitable for the dosing medium.

WARNING!

Caustic burns or other burns through dosing media!

While working on the dosing head, valves and connections, you may come into contact with dosing media.

- ⇨ Use sufficient personal protective equipment.
- ⇨ Rinse the dosing pump with a liquid (e.g. water) which does not pose any risk. Ensure that the liquid is compatible with the dosing medium.
- ⇨ Release pressure in hydraulic parts.
- ⇨ Never look into open ends of plugged pipelines and valves.

WARNING!

Danger of automatic start up!

After connecting the mains supply, residual dosing media in the dosing head can spray out.

- ⇨ Before connecting the mains supply, connect the dosing lines.
- ⇨ Check that all the screw connections have been tightened correctly and are leak-proof.

WARNING!

Danger from electromagnetic radiation!

Solenoid diaphragm dosing pumps In operation, solenoid diaphragm dosing pumps emit a stray magnetic field. If you do not keep far enough away, the function of a pacemaker can be negatively affected.

- ⇨ People with pacemakers must always keep at least 50 cm away from the dosing pump.

CAUTION!

Danger when changing the dosing medium!

Changing the dosing media can provoke unexpected reactions, damage to property and injury.

- ⇨ Clean the dosing pump and the system parts in contact with the media thoroughly before changing the dosing medium.

© Lutz-Jesco GmbH 2022
Subject to technical changes.
220121

CAUTION!

Increased risk of accidents due to insufficient qualification of personnel!

Dosing pumps and their accessories may only be installed, operated and maintained by personnel with sufficient qualifications. Insufficient qualification will increase the risk of accidents.

⇨ Ensure that all action is taken only by personnel with sufficient and corresponding qualifications.

⇨ Prevent access to the system for unauthorised persons.

2.2 Hazards due to non-compliance with the safety instructions

Failure to follow the safety instructions may endanger not only persons, but also the environment and the device.

The specific consequences can be:

- Failure of vital functions of the dosing pump and the system
- Failure of required maintenance and repair methods
- Danger for individuals through dangerous dosing media
- Danger to the environment caused by substances leaking from the system

2.3 Working in a safety-conscious manner

Besides the safety instructions specified in this operating manual, further safety rules apply and must be followed:

- Accident prevention regulations
- Safety and operating provisions
- Safety provisions for handling dangerous substances (mostly the safety data sheets to dosing media)
- Environmental protection provisions
- Applicable standards and legislation

2.4 Personal protective equipment

Based on the degree of risk posed by the dosing medium and the type of work you are carrying out, you must use corresponding protective equipment. Read the Accident Prevention Regulations and the Safety Data Sheets to the dosing media find out what protective equipment you need.

You will require the minimum of the following personal protective equipment:

Personal protective equipment required	
	Protective goggles
	Protective clothing
	Protective gloves

Tab. 3: Personal protective equipment required

Wear the following personal protective equipment when performing the following tasks:

- Commissioning
- Working on the dosing pump while running
- Shut-down
- Maintenance work
- Disposal

2.5 Personnel qualification

Any personnel who work on the dosing pump must have appropriate special knowledge and skills.

Anybody who works on the dosing pump must meet the conditions below:

- Attendance at all the training courses offered by the owner
- Personal suitability for the respective activity
- Sufficient qualification for the respective activity
- Training in handling of the dosing pump
- Knowledge of safety equipment and the way this equipment functions
- Knowledge of this operating manual, particularly of safety instructions and sections relevant for the activity
- Knowledge of fundamental regulations regarding health and safety and accident prevention

All persons must generally have the following minimum qualification:

- Training as specialists to carry out work on the dosing pump unsupervised
- Sufficient training that they can work on the dosing pump under the supervision and guidance of a trained specialist

© Lutz-Jesco GmbH 2022

These operating instructions differentiate between these user groups:

2.5.1 Specialist staff

Thanks to their professional training, knowledge, experience and knowledge of the relevant specifications, specialist staff are able to perform the job allocated to them and recognise and/or eliminate any possible dangers by themselves.

2.5.2 Trained persons

Trained persons have received training from the operator about the tasks they are to perform and about the dangers stemming from improper behaviour.

In the table below you can check what qualifications are the pre-condition for the respective tasks. Only people with appropriate qualifications are allowed to perform these tasks!

Qualification	Activities
Specialist staff	■ Assembly ■ Hydraulic installations ■ Electrical installation ■ Maintenance ■ Repairs ■ Commissioning ■ Taking out of operation ■ Disposal ■ Fault rectification
Trained persons	■ Storage ■ Transportation ■ Control ■ Fault rectification

Tab. 4: Personnel qualification

© Lutz-Jesco GmbH 2022
Subject to technical changes.
220121

3 Intended use

3.1 Notes on product warranty

Any non-designated use of the product can compromise its function or intended protection. This leads to invalidation of any warranty claims!

Please note that liability is on the side of the user in the following cases:

- The dosing pump is operated in a manner which is not consistent with these operating instructions, particularly safety instructions, handling instructions and the section "Intended Use".
- if people operate the product who are not adequately qualified to carry out their respective activities.
- no original spare parts or accessories of Lutz-Jesco GmbH are used.
- Unauthorised changes are made to the device.
- The user uses different dosing media than those indicated in the order.
- The user does not use dosing media under the conditions agreed with the manufacturer such as modified concentration, density, temperature, contamination, etc.

3.2 Intended purpose

The dosing pump MAGDOS LB is intended for the following purpose: the conveying and dosing of liquids.

3.3 Device revision

This operating manual applies to the following devices:

Device	Month / year of manufacture	Firmware
MAGDOS LB	03/2017	01:01

Tab. 5: Device revision

3.4 Principles

- Before delivery, the manufacturer inspected the dosing pump and operated it under specific conditions (with a specific dosing medium with a specific density and temperature, with specific pipe dimensions, etc.) Since these conditions differ at every location of usage, the delivery capacity of the dosing pump should be measured by gauging it at the operating company's installation. For details on the approximate values and the capacity of the dosing pump, refer to the chapter 14 „Delivery characteristic curves“ on page 30.
- Comply with the information regarding the operating and environmental conditions (see chapter "Technical data").
- Any restrictions regarding the viscosity, temperature and density of dosing media must be followed. You must only use dosing media at temperatures above freezing point or below the boiling point of the respective medium.
- The materials of the dosing pump and hydraulic parts of the system must be suitable for the dosing medium that is used. In this connection, note that the resistance of these components can change in dependence on the temperature of the media and the operating pressure.

> Information on the suitability of materials combined with different dosing media can be found in the Compatibility Chart of Lutz-Jesco GmbH.
> The information in this resistance list is based on information from the material manufacturers and on expertise obtained by Lutz-Jesco from handling the materials.
> As the durability of the materials depends on many factors, this list only constitutes initial guidance on selecting material. In all cases, test the equipment with the chemicals you use under operating conditions.

- The dosing pump is not intended for outdoor use unless appropriate protective measures have been taken.
- Avoid leaks of liquids and dust into the casing and avoid direct exposure to sunlight.
- You must never operate dosing pumps in a potentially explosive atmosphere if they do not have corresponding nameplates or an appropriate EC Declaration of Conformity for potentially explosive atmospheres.

3.5 Prohibited dosing media

The dosing pump must not be used for these media and substances:

- Gaseous media
- Radioactive media
- Solid substances
- Combustible media
- All other media that are not suitable for delivery using this dosing pump

3.6 Foreseeable misuse

Below, there is information about the applications of the dosing pump or associated equipment that are not considered to be intended use. This section is intended to allow you to detect possible misuse in advance and to avoid it.

© Lutz-Jesco GmbH 2022

Foreseeable misuse is assigned to the individual stages of the product lifetime:

3.6.1 Incorrect assembly

- Unstable or unsuitable bracket
- Dosing pump bolted wrongly or loosely

3.6.2 Incorrect hydraulic installation

- Suction and pressure lines dimensioned incorrectly
- Unsuitable connection of the pipes due to wrong material or unsuitable connections
- Suction and pressure lines mixed-up
- Damage to threads due to them being tightened too much
- Bending of pipelines
- No free return flow of the pressure relief valve
- Excessive demand due to the pressure differences between the suction and pressure valves
- Through-suction at installation without back-pressure valves
- Damage due to undamped acceleration mass forces
- Exceeding the admissible pressure on the suction and discharge sides
- Using damaged parts

3.6.3 Incorrect electrical installation

- Connecting the mains voltage without a protective earth
- Unsecured mains or one that does not conform to standards
- Not possible to immediately or easily disconnect the power supply
- Wrong connecting cables for mains voltage
- Dosing pump accessories connected to wrong sockets
- Diaphragm monitoring not connected or defective
- Protective earth removed

3.6.4 Incorrect start-up

- Start-up with damaged system
- Shutoff valve closed upon start-up
- Closed suction or pressure line, e.g. due to blockages
- Personnel was not informed before the start-up
- System was recommissioned after maintenance without all the protective equipment and fixtures, etc. being reconnected.
- Inadequate protective clothing or none at all

3.6.5 Incorrect operation

- Protective equipment not functioning correctly or dismantled
- Modification of the dosing pump without authority
- Ignoring operational disturbances
- Elimination of operational disturbances by personnel without adequate qualifications.
- Deposits in the dosing head due to inadequate purging, particularly with suspensions
- Bridging the external fuse
- Operation made more difficult due to inadequate lighting or machines that are difficult to access
- Operation not possible due to dirty or illegible display of the dosing pump
- Delivery of dosing media for which the system is not designed
- Delivery of particulate or contaminated dosing media
- Inadequate protective clothing or none at all

3.6.6 Incorrect maintenance

- Carrying out maintenance during ongoing operation
- Carrying out work that is not described in the operating manual
- No adequate or regular inspection of correct functioning
- No replacement of damaged parts or cables with inadequate insulation
- No securing against reactivation during maintenance work
- Using cleaning materials that can cause reactions with the dosing media
- Inadequate cleaning of the system
- Unsuitable purging medium
- Unsuitable cleaning materials
- Detergents left in system parts
- Using unsuitable cleaning equipment
- Using the wrong spares or lubricants
- Contaminating the dosing medium with lubricant
- Installing spare parts without following the instructions in the operating manual
- Blocking venting orifices
- Pulling off sections of the plant
- Contamination at installation without a dirt trap
- Mixing up the valves
- Mixing up the sensor lines
- Not reconnecting all the lines
- Damaging or not installing all the seals
- Not renewing seals
- Not paying attention to safety data sheets
- Inadequate protective clothing or none at all

3.6.7 Incorrect decommissioning

- Not completely removing the dosing medium
- Dismantling lines while the dosing pump is running
- Device not disconnected from the power supply
- Using the wrong dismantling tools
- Inadequate protective clothing or none at all

3.6.8 Incorrect disposal

- Incorrect disposal of dosing media, operating resources and other materials
- No labelling of hazardous substances

© Lutz-Jesco GmbH 2022
Subject to technical changes.
220121

4 Product description

4.1 Properties

The MAGDOS LB is a solenoid diaphragm dosing pump that is used when precise dosing results are required.

They are characterized by the following properties:

- Output range from 0.5 –15 l/h, up to 16 bar
- Reproducible dosing precision of ± 2 %
- Infinitely variable dosing rate from 0 – 100 %
- Signal LED for display of the operating state
- Material finishes PVC, PP, PVDF, 1.4571
- Integrated dosing head venting facility (except with stainless steel dosing heads (1.4571)
- Suitable for highly aggressive or poisonous dosing media
- Floor- and wall-mounting options
- Connections: Plug M12x1, A-coded
- CSA and UL certified

4.2 Scope of delivery

Please compare the delivery note with the scope of delivery. The following items are part of the scope of delivery:

- Dosing pump MAGDOS LB
- Connections for suction and discharge side
- Operating instructions
- Inspection report and test certificate (optional)
- Accessory kit (optional)

4.3 Structure of the dosing pump

4.3.1 General Overview

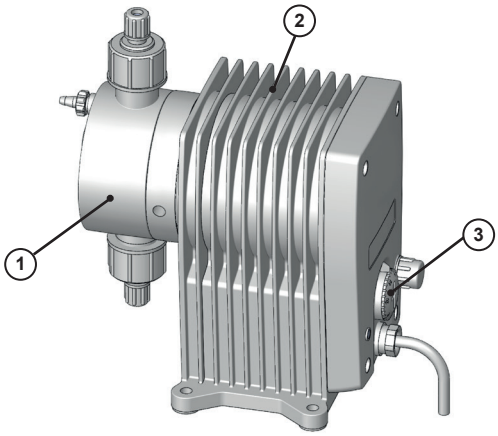

Fig. 1: Dosing pump overview MAGDOS LB

No.	Description
1	Dosing head
2	Drive unit
3	Control box

Tab. 6: Designation of components

4.3.2 Dosing head

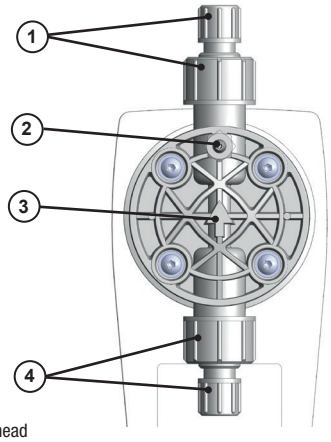

Fig. 2: Dosing head

No.	Description
1	Valve and connection on the discharge side
2	integrated dosing head venting facility (plastic version only)
3	Arrow indicating the direction of throughflow of the dosing medium (plastic version only)
4	Valve and connection on the suction side

Tab. 7: Designation of components

© Lutz-Jesco GmbH 2022

4.3.3 Control elements

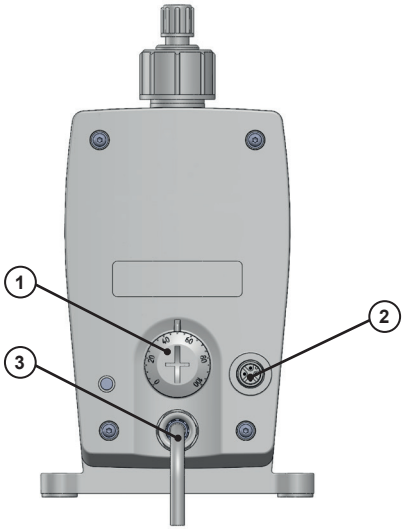

Fig. 3: Controller of dosing pump MAGDOS LB

No.	Description
1	Stroke frequency adjustment for setting the dosing capacity (in per cent)
2	Connection sockets for external operation or connecting accessories
3	Mains cable for power supply

Tab. 8: Designation of components

4.4 Function description

Dosing pumps are positive displacement pumps. They are used if precisely defined delivery of a medium is necessary. A constant volume per stroke or time is delivered.

The system delivers or meters the dosing medium by means of a repeated sequence of suction strokes followed by pressure strokes. This results in a pulsing flow.

If the dosing pump is in the suction stroke phase, the diaphragm is pulled into the rear final position. Due to the resulting vacuum in the dosing head, the pressure valve closes, the suction valve opens and dosing medium flows from the suction line into the dosing head.

If the dosing pump is in the pressure stroke phase, the diaphragm is moved into the front final position. Due to the pressure in the dosing head, the suction valve closes and the dosing medium flows through the pressure valve from the dosing head into the pressurised pipe.

4.5 Rating plate

There is information on the equipment about safety or the product's way of functioning. The information must stay legible for the duration of the service life of the product.

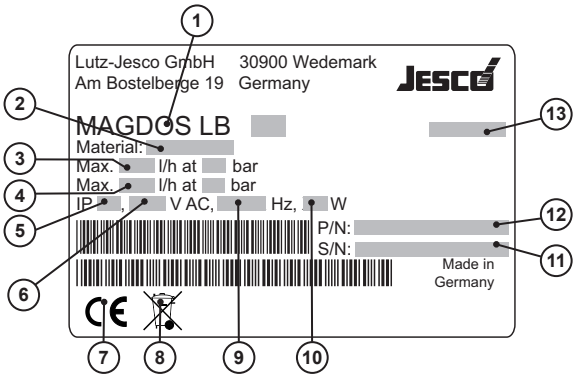

Fig. 4: Rating plate MAGDOS LB

No.	Description
1	Product, type, nominal size
2	Material of the dosing head / seals
3	Maximum delivery capacity at average backpressure
4	Maximum delivery capacity at maximum backpressure
5	Protection class
6	Voltage supply
7	Label showing conformity with applicable European directives
8	WEEE label
9	Frequency
10	Power consumption
11	Serial number
12	Part number
13	Month/year of manufacture

Tab. 9: Designation of components

© Lutz-Jesco GmbH 2022
Subject to technical changes.
220121

5 Technical data

5.1 Delivery capacity data

Please note that some of this data only represents guide values. The actual capacity of a dosing pump depends on various factors. For approximate values of the delivery capacity at different pressures, refer to chapter “14 Delivery characteristic curves” on page 30.

Information		MAGDOS LB Size						
		05	1	2	4	6	10	15
Delivery capacity at max. backpressure	l/h	0.36	0.76	1.9	3.4	6.2	9.0	13
	ml/stroke	0.05	0.05	0.2	0.32	0.57	0.83	0.87
max. delivery pressure	bar	16				8	6	3
Delivery capacity at average backpressure	l/h	0.54	1.1	2.3	3.8	6.8	10	15
	ml/stroke	0.08		0.24	0.35	0.63	0.92	1
Average delivery pressure	bar	8				4	3	1
Max. stroke frequency	rpm	120	250	160	180			250
Suction height for non-gassing media (with a filled suction line)	mWS	5		3		2		

Tab. 10: Delivery capacity data

5.2 Operating conditions and limits

Information		MAGDOS LB (all sizes)
Approved ambient temperature	°C	5 – 45 (with PVC components 5 – 40)*
Relative humidity	%	max. 90
Max. sound pressure level (depressurised)	dB(A)	68 – 75
Max. sound pressure level (at test pressure)	dB(A)	65 – 70
Max. supply pressure	mbar	800
Viscosity limits	mPa·s	300**/1000***
Adjustable dosing range	%	0.5 – 100 in 0.1 steps

Tab. 11: Operating conditions and limits

* Use of the dosing pump at ambient temperatures below 5 °C must be checked individually. In such cases, please contact the manufacturer.

** With a viscosity of ~300 mPa·s and above, you must use spring-loaded valves.

If the viscosity is above 1000 mPa·s, this must be checked individually and the stroke frequency must be between 50 and 100 strokes/min.

5.2.1 Approved media temperature

Information		MAGDOS LB (all sizes)
Dosing head made of PVC	°C	0 – 35
Dosing head made of PP	°C	0 – 60

Tab. 12: Approved media temperature

© Lutz-Jesco GmbH 2022

Information		MAGDOS LB (all sizes)
Dosing head made of PVDF	°C	0 – 60
Dosing head made of 1.4571	°C	0 – 80

Tab. 12: Approved media temperature

5.3 Electrical specifications

Information		MAGDOS LB Size						
		05	1	2	4	6	10	15
Voltage supply		100 – 240 V AC, 50/60 Hz						
Power consumption	W	10	15	21	27	28	29	26
Max. current consumption during dosing stroke	A	2.0		3.0	3.7	3.8	4.1	3.6

Tab. 13: Electrical specifications

5.4 Other data

Information			MAGDOS LB Size						
			05	1	2	4	6	10	15
Weight	Dosing head made of 1.4571	kg	~4.3						
	dosing head made of PVC, PP, PVDF	kg	~3.2						
Diameter of diaphragm		mm	24		33		39		
Electrical cable		m	1.8 m (with mains plug)						
Protection class			IP65 (with covering caps on the connections)						
Insulation class			F						
Valve connection			G5/8 male						
Valve size			DN3		DN4				

Tab. 14: Other data

© Lutz-Jesco GmbH 2022
Subject to technical changes.
220121

6 Dimensions

Dimensioned drawing of MAGDOS LB with dosing head made of PVC, PP or PVDF (all dimensions in mm)

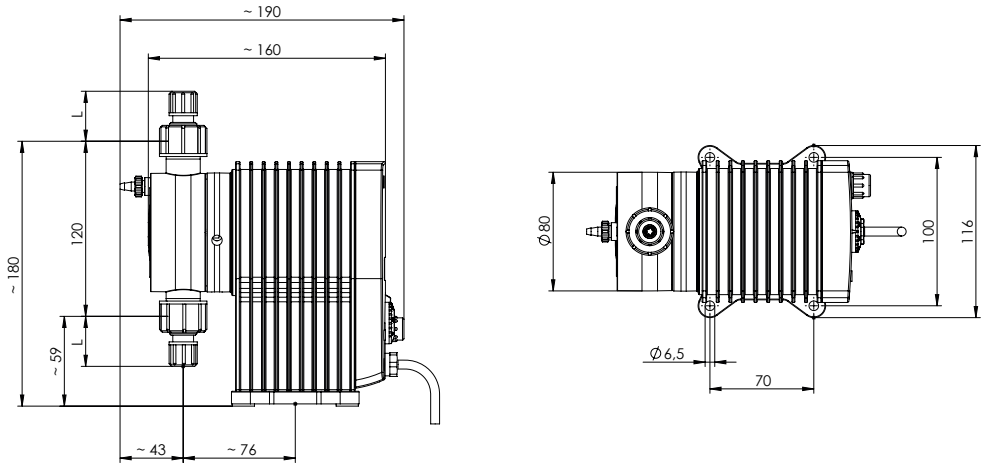

Fig. 5: Dimensioned drawing of MAGDOS LB with dosing head made of PVC, PP or PVDF

Connection	Material	Scale	Nominal width	L
Hose clamp connection	PVC / PP / PVDF	4/6 mm	DN4	31
		1/4 x 3/8"	1/4"	13
		6/9 mm	DN6	34
		6/12 mm	DN6	13

Tab. 15: Dimensions MAGDOS LB

© Lutz-Jesco GmbH 2022

7 Installing the Dosing Pump

DANGER

Mortal danger from electric shock!

Electrically conductive liquid can enter pump housings, cable screw connections and mains connectors.

⇨ Make sure that all protective measures comply at least with the requirements of protection class IP65.

⇨ Always set up the dosing pump such that water cannot enter the housing.

CAUTION!

Danger of personal injury and material damage!

A dosing pump that is difficult to access represents a danger due to incorrect operation and faulty maintenance.

⇨ Install the dosing pump such that it is accessible at all times.

7.1 Set up information

When installing, follow the basic principles below:

- The valves must be vertical: Pressure valve at top, suction valve at bottom. in this connection, pay attention to the arrow on the dosing head. The dosing head must be aligned such that the arrow points vertically upwards.
- You should install the dosing pump at a convenient height for operation.
- It must not be installed under the ceiling.
- The frame of foundation for fixing the dosing pump must not be subjected to jolts. The pump must be vibration-free and stable.
- There must be enough free space in the area of the dosing head and the suction and pressure valves for these parts to be easily dismantled if required. The entire space requirement for installation and maintenance is approximately 1 m².
- The distance from the sides of the dosing pump to the wall or other dosing pumps or equipment must be at least 3 cm. There must be a guaranteed flow of circulating air.
- The maximum ambient temperature must be complied with, see chapter 5.2 „Operating conditions and limits“ on page 12. If necessary, radiant heat from surrounding equipment must be screened.
- Avoid exposure to direct sunlight.
- The dosing pump is not intended for use out of doors unless appropriate protective measures have been taken to prevent dust and water from entering the housing.
- For the dimensions of the fastening holes, refer to chapter 6 „Dimensions“ on page 14.
- The tightening torque for the fastening bolts is 1.5 – 2 Nm.

7.2 Installation examples

7.2.1 Installation on a wall console

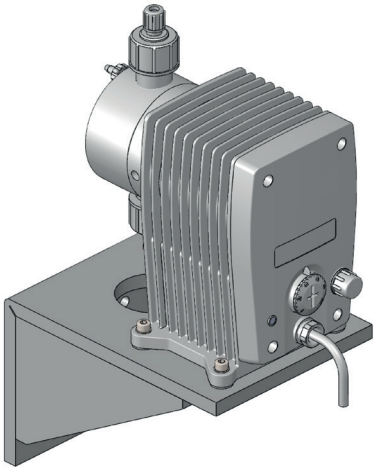

Fig. 6: Installation on a wall console

To reduce the structure-borne noise, the dosing pump is bolted to the wall bracket using rubber elements. The materials necessary for this are included with the wall bracket.

7.2.2 Installation on the wall

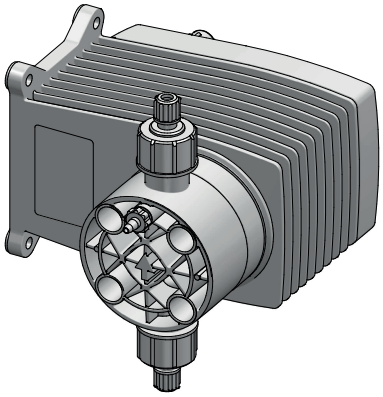

Fig. 7: Installation on the wall

The dosing pump can be mounted to the floor or directly to the wall without the need for additional elements. Turn the dosing head appropriately to ensure the flow direction of the medium through the dosing head.

© Lutz-Jesco GmbH 2022
Subject to technical changes.
220121

8 Hydraulic installations

In this chapter, you will find information about the hydraulic parts of a system that you should install or that can install additionally. In many cases, you must install hydraulic accessories to be able to use all the functions that the dosing pump MAGDOS LB offers, to guarantee functional safety or to achieve a high level of dosing precision.

WARNING!

Caustic burns or other burns through dosing media!

A diaphragm rupture, blocked pressure lines or the use of material not suitable for the dosing medium can result in the discharge of dosing medium. Depending on the type and hazardousness of the dosing medium, this can result in injury.

⇨ Wear the recommended personal protective equipment.

⇨ Make sure that the materials you are using are suitable for the dosing medium.

⇨ Make sure that the lubricants, adhesives, sealants, etc. that you use are suitable for the dosing medium.

⇨ Install a leakage drain.

⇨ Install pressure relief valves.

CAUTION!

Danger of personal injury and material damage!

High peak pressures can lead to piping vibrating and cause them to snap. This can result in injury from piping or escaping dosing media.

⇨ Install pulsation dampeners.

PLEASE NOTE

Damage to drives due to overloading

The pressure conditions between the suction and discharge sides must be balanced; otherwise, overloading can result. This can lead to uncontrolled dosing processes, damage to the piping and to the dosing pump.

⇨ Ensure that the pressure on the discharge side is at least 1 bar than on the suction side.

PLEASE NOTE

Locking of threads

Stainless steel and plastic parts (particularly those made of PVC) that are bolted together in a detachable connection (e.g. the dosing head and the valves) can lock. This makes them difficult to release.

⇨ Before bolting, grease the corresponding parts with a lubricant (e.g. PTFE spray). Ensure that the lubricant is compatible with the dosing medium.

8.1 Design of the system

- The dosing pumps technical data (see chapter 5 „Technical data“ on page 12) must be taken into account and the plant s layout must be set up appropriately (e.g. pressure loss when rating the lines with regard to their nominal diameter and length).
- The entire system and its integrated dosing pump must be designed in such a way that an escaping dosing medium (due to the failure of wearing parts such as the diaphragm, or burst hoses) does not lead to permanent damage to system parts or the premises.
- The leakage opening of the dosing head must be visible so that you can detect a diaphragm rupture. It must be possible for the outflow from the leakage drain to be on a free downwards gradient.
- If you use hazardous dosing media, the installation must be designed such that no disproportionately high consequential damages arise due to dosing media escaping.
- To avoid dosing errors after the end of the process, the dosing pump must be locked hydraulically.
- To allow you to easily inspect the pressure conditions in the system, you should provide connections for pressure gauges close to the suction and pressure valves.

8.2 System piping

- The system piping must not exert any force on the connections and valves of the dosing pump.
- This means that steel piping should be connected to the dosing pump by means of flexible pipe sections.
- The nominal diameters of the pipework and the installed fittings should be rated the same as or greater than the nominal diameters of the dosing pump's suction and pressure valves.
- The suction line should be kept as short as possible.
- You should avoid intertwined hoses.
- Avoid loops, since air bubbles can collect.

© Lutz-Jesco GmbH 2022

8.3 Aligning the dosing head

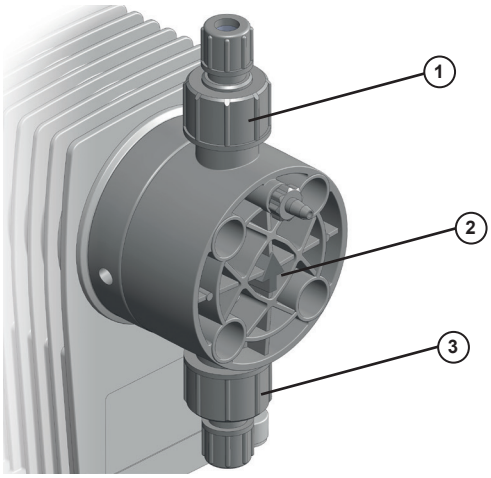

Fig. 8: Aligning the dosing head

When connecting the dosing lines to the dosing pump, you must observe the direction of through-flow (see arrow). The dosing head must be aligned vertically. The alignment can be changed in 90° intervals.

The suction valve (3) must always point downwards. Accordingly, arrow (2) and pressure valve (1) always point upwards. This is irrespective of the positioning of the dosing head to the drive.

8.4 Hydraulic connections

8.4.1 Connecting the hose clamp connection

Choose the hose connection according to the condition of the hose (material, inner diameter, wall thickness) in order to ensure maximum pressure resistance.

8.4.1.1 Size 4/6 and 6/9

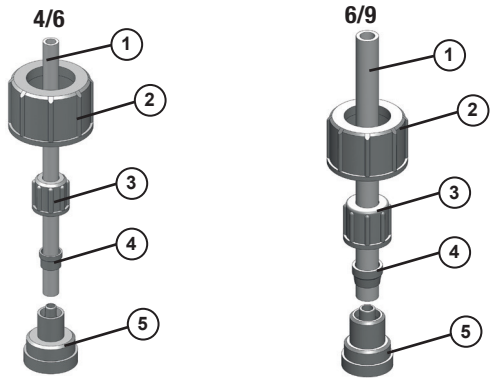

Fig. 9: Hose clips 4/6 and 6/9 (internal and external diameters in mm)

Perform the following working steps:

1. Cut the hose (1) to the appropriate length neatly and at an exact right angle.
2. Place a gasket that is suitable for the dosing medium between the connection (5) and the valve.
3. Screw the connecting piece to the dosing pump's valve using the union nut (2).
4. Thread the union nut (3) and the clamping ring (4) onto the hose.
5. Plug the hose all the way in to the grommet of connection piece.
6. Push the clamping ring onto the grommet of connection piece and screw it to the union nut.
7. Carry out the same procedure with the connection to the dosing pump's other valve.

✓ **Hose clamp connection connected.**

8.4.1.2 Size 6/12

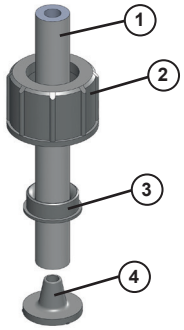

Fig. 10: Hose clip 6/12 (internal and external diameters in mm)

Size 6/12 hose clips only have a union nut. It clamps the hose onto the grommet of the connection piece and at the same time fastens on the dosing pump's valve.

Perform the following working steps:

1. Cut the hose (1) to the appropriate length neatly and at an exact right angle.
2. Place a gasket that is suitable for the dosing medium between the connection (4) and the valve.
3. Push the union nut (2) and the cutting ring (3) over the hose.
4. Press the end of the hose onto the grommet of connection piece. You can do this more easily by moistening the end of the hose on the inside or applying some lubricant to the grommet in the cone area. You should push at least two thirds of the hose onto the grommet of the connection piece.
5. Push the cutting ring over the hose into the cone area on the grommet of connection piece.
6. Screw the union nut onto the valve of the dosing pump.

✓ **Hose clamp connection connected.**

8.4.2 Connecting the cemented connection

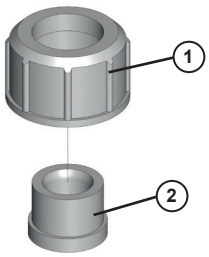

Fig. 11: Stick-on connector

Perform the following working steps:

1. Cut the PVC tube to length.

© Lutz-Jesco GmbH 2022
Subject to technical changes.
220121

2. Push the union nut onto the tube.
3. Glue the cemented sleeve (2) to the pipe (follow the manufacturer's instructions for the adhesive).
4. Screw the union nut onto the valve of the dosing pump. Use a gasket that is suitable for the dosing medium.

✓ **Cemented connection connected.**

8.4.3 Connecting the threaded connection

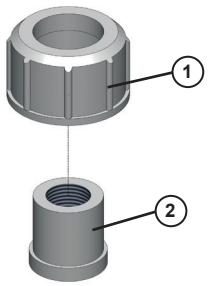

Fig. 12: Threaded connection

Perform the following working steps:

1. Cut the tube to length.
2. Cut the thread (2) onto the end of the tube.
3. Push the union nut onto the tube.
4. Seal the thread. When choosing your sealing material, take into account its resistance to material, temperature and pressure.
5. Screw the union nut onto the valve of the dosing pump. Use a gasket that is suitable for the dosing medium.

✓ **Threaded connection connected.**

> Under normal conditions, you only need to screw the hydraulic connections finger-tight. However, due to the material settling, the pre-tension of the screw connection can slacken. This means that you must re-tighten the screw connection before carrying out commissioning.

8.5 Connecting a leakage drain

Lutz-Jesco GmbH dosing pumps are produced to the highest of quality standards with a long service life. However, some parts are subject to operational wear. This is the case particularly with the diaphragms that are continuously subjected to forces during the suction and discharge strokes and to the effects of the dosing medium.

If a diaphragm ruptures, the dosing medium starts to leak. This leakage is drained via the leakage opening. On the flange of the dosing head, there are three openings for this purpose. Depending on the alignment of the dosing pump, the leakage is drained via the downward opening.

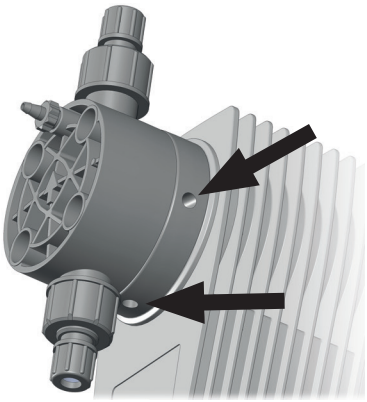

Fig. 13: Openings of the leakage drain

> **PLEASE NOTE**
>
> **Damage to drives due to effervescent media**
>
> If a hose is connected to the leakage drain and it is routed back into the dosing tank, effervescent media can enter the drive and damage it.
>
> ⇨ Collect the leakage in a collecting pan.
>
> ⇨ As an alternative, you can route the leakage back to the dosing tank using a funnel. You should install the funnel at an adequate distance from the leakage opening.

8.6 Connecting the dosing head venting facility

MAGDOS LB dosing heads have an integrated dosing head venting facility.

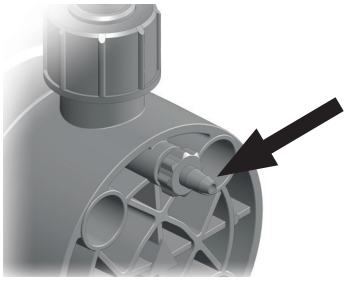

Fig. 14: Dosing head venting facility with hose connection

Perform the following working steps:

1. Connect a 4/6 hose to the dosing head venting facility.
2. Route the other end of the hose into the dosing tank or a collecting tank.

✓ **Dosing head venting facility connected.**

© Lutz-Jesco GmbH 2022

8.7 Hydraulic accessories

The following chapter is intended to give you an overview of installation options.

Please note that these operating instructions are no substitute for the instructions supplied with the accessories in each case. The corresponding documentation supplied with the product applies to safety information and provides exact instructions on assembly.

8.7.1 Injection nozzle

If the pressure line enters a main line, it is advisable to install an injection nozzle.

Injection nozzles have three main functions:

- Dosing the medium into a main line
- Preventing flowback into the pressure line through a non-return valve

Notes on assembly:

- Double-ball injection nozzles must be installed into the main line vertically from the bottom. You can install hose and spring-loaded injection nozzles any way you like.
- With dosing media that tend to crystallize, it is advisable to carry out installation into the main line from the bottom. This prevents air bubbles from being trapped.
- Many dosing media tend to contaminate the injection nozzles, which can lead to blockages. In cases like this, it is advisable to install an injection nozzle that is easy to dismantle and block off.

8.7.2 Pressure-relief valve

Pressure relief valves have an important safety function for protecting the dosing pump and the associated pipes and fittings. The dosing pump can generate a pressure that is many times the rated one. A blocked pressure line can lead to dosing medium escaping.

An improperly high pressure can occur if:

- The shut-off valves are closed even though the dosing pump is running
- Pipes block

At an appropriate pressure, a pressure relief valve opens a bypass line and protects the system in this way from damage caused by over-pressure.

Notes on assembly:

- The line for returning dosing medium from the pressure relief valve must be routed to the dosing tank or to a collecting pan.
- The pressure in the dosing tank must not be too high so that it is possible to accommodate the returned dosing medium.
- As an alternative, the system can return dosing medium into the suction line in front of the dosing pump. In this case, there must not be a non-return valve or a foot valve in the suction line.
- You should install the pressure relief valve as close as possible to the dosing head.

8.7.3 Back-pressure valve

Back-pressure control valves are necessary if:

- There are considerably fluctuating system pressures
- The pressure on the suction side is higher than on the discharge side or if you intend to carry out dosing into depressurized lines.

In cases like this, if you do not use a back-pressure valve, imprecise dosing results will occur or overloading will result. The back-pressure valve solves these problems by generating a defined, constant backpressure.

In some circumstances, a back-pressure valve is unnecessary if you use a hose injection nozzle and if the backpressure that it generates is adequate.

8.7.4 Pulsation dampener

Pulsation dampeners have the following functions:

- Damping pulsating delivery flows for processes that require low-pulsation dosing
- Reducing the throughflow resistance with long pipelines

When installed on the suction side:

- Damping of acceleration mass forces and with this reduction of wear on the dosing pump
- Preventing cavitation (pull-off of the liquid column) due to too high acceleration

However, pulsation dampeners also have important safety functions, since they prevent pressure peaks from arising that lead to piping vibrating and cause them to snap.

This problem can occur:

- With the high amplitudes of the vibrations
- When using long pipes (the severity of the pulsation increases with the length of the pipe)
- When using rigid piping instead of elastic hoses

Notes on assembly:

- You should carry out assembly in the direct vicinity of the location where you want to damp the pressure peaks (directly in front of the suction valve or directly behind the pressure valve).
- Pulsation dampeners should be installed with throttle valves or back-pressure valves installed directly behind them. By setting the valves appropriately, you can further-optimise damping of the pulsations.
- To prevent unnecessary pipe friction losses, you should lay the connecting line straight and in accordance with the rated width of the pulsation dampener.
- You must separately fasten relatively large pulsation dampeners and ones with hose connections.
- Pipelines must not transfer any mechanical tensions onto the pulsation dampener.

© Lutz-Jesco GmbH 2022
Subject to technical changes.
220121

8.7.5 Priming aid

Priming aids are particularly advisable:

- In the case of dosing pumps with small volumetric displacements per stroke or with low stroke length settings
- With high suction hights
- With highly dense dosing media
- At priming for the first time due to dry valves and air in the suction line and the dosing head
- In dosing systems with frequent downtimes

Further advantages resulting from priming aids:

- Preventing cavitation in the suction line
- Gas removal
- Optical dosing control with small amounts
- Smoothing of the suction flow

8.7.6 Level control

Level monitoring of suction-side feeding of the dosing medium to prevent the tank being sucked dry and to ensure that it can be topped up again in good time.

8.7.7 Dosing of suspensions

When dosing suspensions, the dosing head must be rinsed regularly to prevent depositing. To do this, you install a feed line for the rinsing medium (water) in the suction side installation.

8.7.8 Suction pressure regulator

A suction pressure regulator may be necessary if the suction-side installation of the system demonstrates a varying suction pressure or supply pressure:

- Dosing pumps that are installed above dosing tanks deliver less as the tank empties, since the suction head increases.
- Dosing pumps that are installed below dosing tanks deliver less as the tank empties, since the positive delivery pressure reduces.

Further problems that can occur:

- Greater wear on the dosing pump, e.g. diaphragm rupture due to the effects of heavy forces with particularly high tanks and high-density dosing media.
- Idling of the dosing tank in the case of a diaphragm rupture or pipe breakage
- Impermissibly high forces in the pump transmission that occur when dosing pumps receive the dosing medium directly from the pressure line
- Reduced performance or destruction of fittings due to cavitation with long suction lines

Installing a suction pressure regulator is a remedy for the problems above. The suction pressure regulator is opened by the dosing pump's suction pressure. This ensures that no dosing medium can flow if the dosing pump is not running or no vacuum can be generated following a pipe fracture.

Notes on assembly:

- When using a large suction pressure regulator, you should provide a pulsation dampener on the suction side.

© Lutz-Jesco GmbH 2022

9 Electrical installation

DANGER

Mortal danger from electric shock!

If there is an electrical accident, you must disconnect the dosing pump from the mains as quickly as possible.

⇨ Install an emergency stop switch or integrate the dosing pump into the plant safety concept.

CAUTION!

Danger of automatic start up!

The dosing pump does not have an ON/OFF switch and may start to pump as soon as it is connected to the mains supply. This means that dosing medium can escape. Depending on the type and hazardousness of the dosing medium, this can result in damage to property or to injury.

⇨ Install an emergency stop switch or integrate the dosing pump into the plant safety concept.

PLEASE NOTE

Damage due to incorrect mains voltage

The dosing pump can be damaged if you connect it to the wrong mains voltage.

⇨ Observe the information on the mains supply that is given on the rating plate.

PLEASE NOTE

Insufficient electromagnetic compatibility

When you connect the dosing pump to a socket without an attached protective earth, it is not possible to guarantee the interference radiation and interference immunity according to EMC regulations.

⇨ Only connect the dosing pump to sockets with an attached protective earth.

9.1 Principles

- The dosing pump has a 100 – 240 V AC 50/60 Hz wide-range power supply unit.
- The electrical connection comply with local regulations.
- The dosing pump must be plugged into a grounded power outlet.
- To avoid dosing errors at the end of the process, the dosing pump must be locked electrically.
- The dosing pump must not be operated by switching the mains voltage on or off.
- Signal cables must not be laid parallel to high-voltage current lines or mains cables. You must route supply and signal lines in separate channels. An angle of 90° is required at line crossings.

9.2 Conductive rubber band

PLEASE NOTE

Conductive rubber band

The MAGDOS LB is delivered with a conductive rubber band connected in the connection port. The band conducts electricity and ensures that the contact in the connection port remains closed when no cable is connected. If the conductive rubber band in connection port is missing or not correctly installed and is not connected with a cable, it is not possible to start the dosing pump.

⇨ Insert the conductive rubber band in connection socket if you do not wire up the connection port.

⇨ Ensure that the conductive rubber band is installed on the correct contacts (see instructions in following chapters).

⇨ Retain the conductive rubber band so that you can change the assignment of the connection port later.

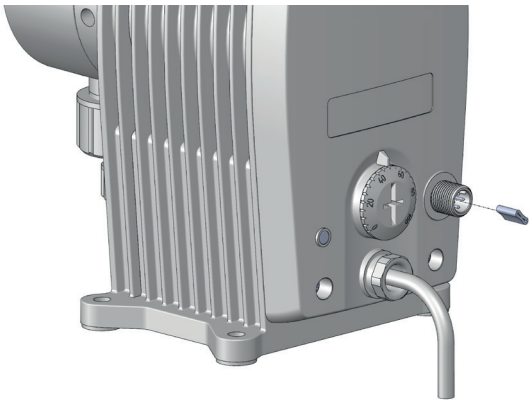

Fig. 15: Inserting the conductive rubber band

Removing the conductive rubber band

Remove the conductive rubber band before inserting the cable in the connection socket.

After the cable has been removed, the conductive rubber band must be reinserted in the connection socket. Insert it between pins 1+2 and 3+4 as shown in Fig. 15.

© Lutz-Jesco GmbH 2022
Subject to technical changes.
220121

9.3 Description of the connection sockets

Fig. 16: Connection socket

Input
Release input or level input

Tab. 16: Input of the control unit

9.4 Assignment of the connection port

The connection port is fitted with a gate input. Signals such as external release or level contact (main alarm) can be sent via this input.

Pin	M12x1 (A-coded)	Assignments	Connection	Cable colour*	
2		External Off/On or level contact	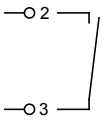	White	WH
3		Ground (GND)		Blue	BU

Tab. 17: Connection socket

* Applies to cable colours of cables from Lutz-Jesco GmbH. No liability is accepted for cables from other manufacturers.

9.4.1 Release input

The dosing pump can be switched on or off externally via the release input.

9.4.2 Level input

Connection for level monitoring of a dosing tank (e.g. a suction line with a float switch).

- Main alarm
- Potential-free contact
- Normally Open (N.O.)

© Lutz-Jesco GmbH 2022

10 Operation

WARNING!

Caustic burns or other burns through dosing media!

After connecting the mains supply, residual dosing media in the dosing head can spray out.

⇨ Before connecting the mains supply, connect the dosing lines.

⇨ Check that all the screw connections have been tightened correctly and are leak-proof.

CAUTION!

Danger of automatic start up!

The dosing pump does not have an ON/OFF switch and may start to pump as soon as it is connected to the mains supply. This means that dosing medium can escape. Depending on the type and hazardousness of the dosing medium, this can result in injury.

⇨ Stop the dosing pump before disconnecting it from the mains supply.

⇨ Ensure that the dosing pump has been installed correctly before connecting it to the mains supply.

10.1 Commissioning the dosing pump

Precondition for action:

✓ The dosing pump was fitted and installed in accordance with the sections “Fitting the dosing pump”, “Hydraulic installation” and “Electrical installation”.

✓ All the mechanical fastenings have been inspected to ensure adequate load-bearing capacity.

✓ The dosing head screws have been tightened with the correct torque.

✓ All the hydraulic sections have been inspected to ensure they are adequately leak-proof and that the through flow direction is correct.

For initial commissioning, it is advisable to use water as the dosing medium to check that the system is leak-proof and that the dosing pump is functioning correctly. Check first whether undesirable reactions could occur between the actual dosing medium and the water.

Perform the following working steps:

1. Open the shut-off valves on the suction and discharge sides if present.
2. Plug in the dosing pump's mains plug to the power supply.
3. If the dosing head is fitted with a vent screw, vent the dosing pump (see section 10.1.1 „Venting the dosing pump“ on page 23).
4. Start the dosing pump in accordance with the instructions in section 10.1 „Commissioning the dosing pump“ on page 23.

▶ The dosing pump primes. If it does not prime enough, use a priming aid (see chapter 8.7.5 „Priming aid“ on page 20).

At initial commissioning, it is advisable to prime the pump without backpressure. For this purpose, we recommend installing a relief valve on the discharge side of the dosing pump.

✓ **The dosing pump is commissioned.**

10.1.1 Venting the dosing pump

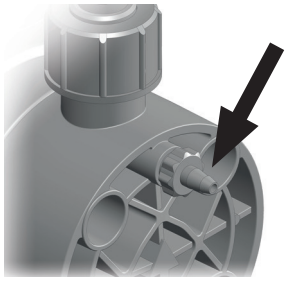

Fig. 17: Dosing head venting facility with vent screw

Precondition for action:

✓ The dosing head venting facility connected has been connected in accordance with the chapter 8.6 „Connecting the dosing head venting facility“ on page 18.

Perform the following steps:

1. Open the vent screw by one complete turn (looking onto the dosing head, anti-clockwise).
2. Start the dosing pump. To this end, set the stroke frequency adjustment to 100 %.
3. Stop the dosing pump as soon as there is a continuous throughflow from the dosing head venting facility with no air bubbles. To this end, set the stroke frequency adjustment to 0 %.

▶ The dosing pump stops.

4. Close the vent screw.

✓ **The dosing pump is vented.**

If you are using effervescent media, allow them to flow out continuously. Open the vent screw such that about one drop per 1 – 3 strokes escapes.

© Lutz-Jesco GmbH 2022
Subject to technical changes.
220121

10.2 Signal LED

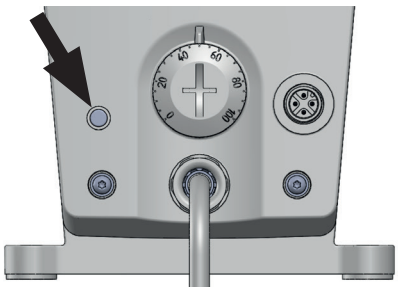

Fig. 18: Signal LED

A signal LED is located on the fore side of the pump; it indicates operating states and errors

Colour	Signal type	Reason
White	Continuously off	Mains voltage missing
Green	Continuously on	Mains voltage is present
Green	Flashes	Pump running LED flashes with every stroke
Red	Continuously on	External release withdrawn / contact open
Red	Continuously on	Level contact open / container empty

Tab. 18: Signal LED

10.3 External On / Off via Release input

10.3.1 Starting the dosing pump

➔ Close the switching contact on the Release input.

✓ **Dosing pump has started.**

10.3.2 Stopping the dosing pump

➔ Open the switching contact on the Release input.

✓ **Dosing pump has stopped.**

10.4 Decommissioning the dosing pump

Perform the following working steps:

1. Stop the dosing pump in accordance with the selected operating mode.
2. Unplug the dosing pump's mains plug from the power supply.
3. Disconnect all electrical connections.
4. Depressurise all the hydraulic parts in the system.
5. Unplug all the hydraulic connections on the dosing pump.
6. Empty the dosing head.
7. Remove any residual dosing medium from the dosing head by flushing the system with a washing agent. Ensure that the washing agent is compatible with the dosing medium.

✓ **Dosing pump is decommissioned.**

10.5 Shutting down in an emergency

- In an emergency, you must immediately disconnect the dosing pump from the mains supply or activate the Emergency Stop switch installed in the system.
- Depending on the type of incident, you must depressurized the hydraulic connections or locked to prevent dosing medium from escaping.
- You must follow the safety data sheet of the dosing medium.

10.6 Storage

Storing the dosing pump correctly extends its service life. You should avoid negative influences such as extreme temperatures, high humidity, dust, chemicals, etc.

Ensure ideal storage conditions where possible:

- The storage place must be cold, dry, dust-free and moderately ventilated.
- Temperatures between + 2 °C and + 40 °C (for PP and PVDF dosing heads, between + 2 °C and + 60 °C)
- Relative air humidity must not exceed 90 %

10.7 Transportation

Perform the following working steps:

- The unit should be thoroughly cleaned. Any dangerous dosing media must be additionally neutralised and decontaminated.
- All accessories should be dismantled.
- All openings should be closed, so that no foreign objects can get into the system.
- The dosing pump must be suitably packed, preferably in the original packing, for transportation.

If the device is sent back to the manufacturer, please follow chapters 16 „Declaration of no objection“ on page 32 and 17 „Warranty claim“ on page 33.

10.8 Disposal of old equipment

- The waste unit must be thoroughly cleaned. Any dangerous dosing media must be additionally neutralised and decontaminated.
- Any residual dosing media must be removed in a professional manner.
- The dosing pump must be disposed of in accordance with applicable local laws and regulations. The device does not belong to household waste!
- As the disposal regulations may differ from country to country in the European Union, please consult your supplier if necessary. In Germany, the manufacturer must provide free-of-charge disposal provided the unit has been sent in a safe manner.

© Lutz-Jesco GmbH 2022

11 Maintenance

Dosing pumps by Lutz-Jesco are manufactured to the highest quality standards and have a long service life. Nevertheless, some of their parts are subject to wear due to operation (e.g. diaphragms, valve seats, valve balls). This means that regular visual inspections are necessary to ensure a long operating life. Regular maintenance will protect the dosing pump from operation interruptions.

DANGER

Mortal danger from electric shock!

Live parts can inflict fatal injuries.

⇨ Before carrying out any maintenance work, always disconnect the dosing pump from the power supply.

⇨ Secure the dosing pump from accidental power-up.

CAUTION!

Danger of personal injury and material damage!

The dosing pump can generate a pressure that is many times the rated one. The dosing medium can escape in the case of material failure or wear on the dosing head, the connection pipe or the seals that are used.

⇨ Carry out maintenance work at the recommended intervals.

11.1 Maintenance intervals

This table gives you an overview of maintenance work and the intervals at which you must carry it out. The next few sections contain instructions for carrying out this work.

Maintenance work to be carried out	Frequency
Check that piping is seated firmly	Regularly
Check that suction and pressure valves are seated firmly	Regularly
Clean suction and pressure valves	Regularly
Check that electrical connections are not damaged	Regularly
Tighten up dosing head bolts	■ Regularly ■ Before initial commissioning ■ After each diaphragm change
Check diaphragm for leakage due to rupture	Regularly (as long as no leak monitoring system is installed)

Tab. 19: Maintenance information and maintenance intervals

Maintenance work to be carried out	Frequency
Check that the installed accessories are functioning correctly	Regularly
Check the dosing pump for unusual noises during operation, unusual temperatures or smells	Regularly
Replace parts that are subject to wear (diaphragms, valves, seals, etc.)	When unacceptable levels of wear are detected
Rinse out and clean the dosing pump	■ Before changing diaphragms ■ Before taking out of service for a long period of time ■ After feeding aggressive, sticky, crystallising or contaminated liquids

Tab. 19: Maintenance information and maintenance intervals

11.2 Tighten up dosing head bolts

➔ Tighten the dosing head bolts in diagonally opposite sequence with a torque wrench.

The necessary torque is 180 Ncm.

11.3 Change the diaphragm

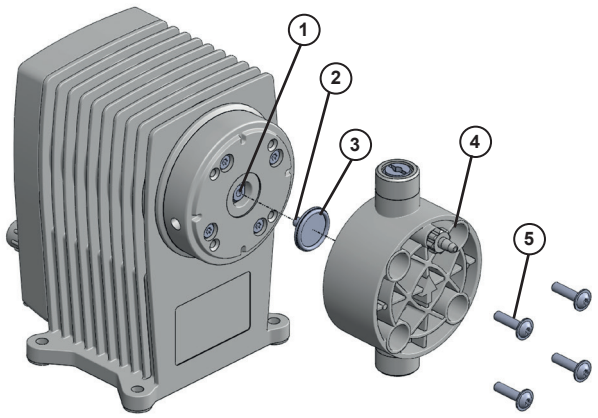

Fig. 19: Exploded view of the diaphragm and dosing head

11.3.1 Remove the old diaphragm

Precondition for action:

✓ You have disconnected the dosing pump from the mains supply.

✓ You have depressurised the hydraulic sections of the plant.

✓ You have rinsed the dosing pump using a safe medium (e.g. water).

© Lutz-Jesco GmbH 2022
Subject to technical changes.
220121

Perform the following working steps:

1. Screw out the four screws (5) on the dosing head using a suitable tool (SW 3 Allen key) and take off the dosing head (4).
2. Use pliers to bend the edge of the diaphragm (3) slightly upwards and screw it out counter-clockwise.

✓ **Diaphragm removed.**

11.3.2 Install a new diaphragm

PLEASE NOTE

Damage to the dosing head/diaphragm leaks

If you tighten the screws too much, this can lead to the dosing head being damaged. However, not tightening the screws enough leads to the diaphragm being leaky and correct functioning being affected.

⇨ Tighten the screws to a torque of 180 Ncm.

Precondition for action:

✓ You have thoroughly cleaned the diaphragm rod (2) and the diaphragm flange (1) so that the new diaphragm is not affected by dosing medium residues.

✓ The diaphragm (3) thread was lightly greased (e.g. Molycote Longterm W2).

Perform the following working steps:

1. Screw the diaphragm manually in the clockwise direction until it safely contacts into the diaphragm rod.
2. Bring the dosing head into position and insert the screws. First tighten the screws finger-tight. After this, tighten the bolts on the diagonal, e.g. top left – bottom right – top right – bottom left.

✓ **Diaphragm change finished.**

11.4 Clean suction and pressure valves

Contaminated valves affect the dosing preceision and this means that you should clean the valves on a regular basis.

With dosing heads made of plastic, when replacing a valve you must replace the complete dosing head (see chapter 13 „Spare parts“ on page 29).

© Lutz-Jesco GmbH 2022

12 Troubleshooting

See below for information about how to rectify faults on the device or the system. If you cannot eliminate the fault, please consult with the manufacturer on further measures or return the dosing pump for repair.

12.1 Dosing pump not delivering or output too low

Possible cause	Remedy
Wrong type of dosing pump selected	➔ Check the dosing pump's technical data and if necessary select a type with a higher delivery capacity.
Valve leaking or blocked	➔ Clean the valve and vent the dosing pump. ➔ Tighten the screw connections.
Valve installed incorrectly	➔ Reassemble the valve. Ensure that the valve balls are located above the valve seats.
Valve damaged (e.g. valve balls)	➔ Remove the damaged parts or install a new valve.
Suction line is leaking	➔ Seal the leak locations or replace the parts.
Suction line is blocked (e.g. screen in foot valve)	➔ Clean the suction line.
Shut-off valves closed	➔ Open the shut-off valves. Inspect the dosing pump for possible damage.
Suction head too high	➔ Set the dosing pump to feed or reduce the suction head. ➔ Install a priming aid.
Viscosity too high	➔ Possibly reduce the concentration of the dosing medium or increase the temperature. ➔ Install spring-loaded valves. ➔ Increase the pipe diameter.
Current supply interrupted	➔ Reconnect the current supply
The dosing pump's electrical data does not match that of the mains supply	➔ Check the electrical installation.
System backpressure too high (measured at discharge connection of dosing pump)	➔ Clean blocked injection nozzle. ➔ Install pulsation dampeners to reduce pressure peaks if pipes are too long. ➔ Check function of safety valves.

Tab. 20: Type of fault: Dosing pump not delivering or output too low

12.2 Dosing pump does not prime

Possible cause	Remedy
Valve leaking or blocked	➔ Clean the valve and vent the dosing pump. ➔ Tighten the screw connections.
Valve installed incorrectly	➔ Reassemble the valve. Ensure that the valve balls are located above the valve seats.
Valve damaged (e.g. valve balls)	➔ Remove the damaged parts or install a new valve.
Suction line is leaking	➔ Seal the leak locations or replace the parts.
Suction line is blocked (e.g. screen in foot valve)	➔ Clean the suction line.
Shut-off valves closed	➔ Open the shut-off valves. Inspect the dosing pump for possible damage.
Suction head too high	➔ Set the dosing pump to feed or reduce the suction head. ➔ Install a priming aid.
Viscosity too high	➔ Possibly reduce the concentration of the dosing medium or increase the temperature. ➔ Install spring-loaded valves. ➔ Increase the pipe diameter.
Current supply interrupted	➔ Reconnect the current supply
Dry the valves	➔ Dampen the dosing head and the valves ➔ Vent the dosing head.
Air in the suction line with simultaneous pressure on the pressure valve	➔ Vent the dosing head or the lines.

Tab. 21: Type of fault: Dosing pump does not prime

12.3 Delivery rate varies

Possible cause	Remedy
Valve leaking or blocked	➔ Clean the valve and vent the dosing pump. ➔ Tighten the screw connections.
Valve damaged (e.g. valve balls)	➔ Remove the damaged parts or install a new valve.
Suction line is leaking	➔ Seal the leak locations or replace the parts.

Tab. 22: Type of fault: Delivery rate varies

© Lutz-Jesco GmbH 2022
Subject to technical changes.
220121

Possible cause	Remedy
Suction line is blocked (e.g. screen in foot valve)	➔ Clean the suction line.
Viscosity too high	➔ Possibly reduce the concentration of the dosing medium or increase the temperature. ➔ Install spring-loaded valves. ➔ Increase the pipe diameter.
The dosing pump's electrical data does not match that of the mains supply	➔ Check the electrical installation.
Suction side pressure too high (pump siphoning)	➔ Install a back-pressure valve in the pressure line.
Pressure peaks due to acceleration with long suction lines	➔ Install a suction pressure regulator.
Imprecise dosing due to changeable positive and negative suction heads.	➔ Install a suction pressure regulator.
System backpressure too high (measured at discharge connection of dosing pump)	➔ Clean blocked injection nozzle. ➔ Install pulsation dampeners to reduce pressure peaks if pipes are too long. ➔ Check the safety valves.

Tab. 22: Type of fault: Delivery rate varies

12.4 No stroke movement observed

Possible cause	Remedy
Broken spring plate	➔ Contact the manufacturer.
Current supply interrupted	➔ Reconnect the current supply
The dosing pump's electrical data does not match that of the mains supply	➔ Check the electrical installation.
Pressure peaks due to acceleration with long suction lines	➔ Install a suction pressure regulator.
System backpressure too high (measured at discharge connection of dosing pump)	➔ Clean blocked injection nozzle. ➔ Install pulsation dampeners to reduce pressure peaks if pipes are too long. ➔ Check function of safety valves.

Tab. 23: Type of fault: No stroke movement observed

12.5 Dosing pump delivery rate too high

Possible cause	Remedy
Suction side pressure too high (pump siphoning)	➔ Install a back-pressure valve in the pressure line.
Pressure peaks due to acceleration with long suction lines	➔ Install a suction pressure regulator.

Tab. 24: Type of fault: Dosing pump delivery rate too high

12.6 Diaphragm is torn or tears too often

Possible cause	Remedy
Shut-off valves closed	➔ Open the shut-off valves. Inspect the dosing pump for possible damage.
Pressure peaks due to acceleration with long suction lines	➔ Install a suction pressure regulator.
The materials are not suitable for the dosing medium being used	➔ Check the resistance of the materials.
Diaphragm not screwed up to the end stop on the dia-phragm rod	➔ Screw a new diaphragm up to the end stop.
System backpressure too high (measured at discharge connection of dosing pump)	➔ Clean blocked injection nozzle. ➔ Install pulsation dampeners to reduce pressure peaks if pipes are too long. ➔ Check function of safety valves.
Media sediment in dosing head	➔ Clean the dosing head.

Tab. 25: Type of fault: Diaphragm is torn or tears too often

12.7 Loud noises on the dosing pump

Possible cause	Remedy
The drive magnet's stop damper is worn-out	➔ Contact the manufacturer.

Tab. 26: Type of fault: Loud noises on the dosing pump

© Lutz-Jesco GmbH 2022

13 Spare parts

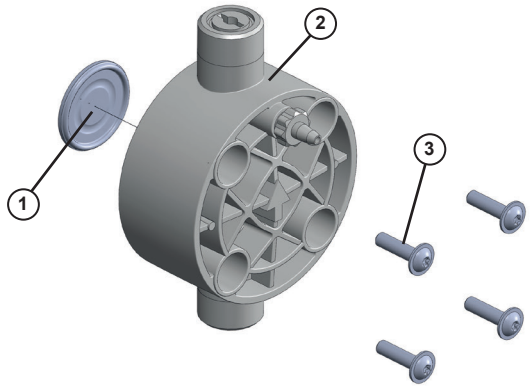

Fig. 20: Spare parts kits (dosing head made of plastic)

Required sets for a complete service:

- 1 diaphragm spare parts kit
- 1 dosing head spare parts kit including valves

13.1 Diaphragm spare parts kits

Diaphragm spare parts set containing:

- 1 Diaphragm (item 1)
- 1 set of dosing head screws (item 3)

Diaphragm kit	Sizes	Item no.
	05, 1	39121
	2, 4	39122
	6, 10, 15	39123

13.2 Dosing head spare parts kits including valves

Spare parts set: dosing head including screws consisting of:

- Dosing head (item 2)
- Valves
- 1 set of dosing head screws (item 3)

PVC	Sizes	Item no.
Ceramic/PVDF/FPM (ball/seat/seals)	05, 1	38981
	2, 4	38982
	6, 10, 15	38983

PP	Sizes	Item no.
Ceramic/PVDF/FPM (ball/seat/seals)	05, 1	38978
	2, 4	38979
	6, 10, 15	38980

PVDF	Sizes	Item no.
PTFE/PVDF/FPM (Ball/seat/seals)	05, 1	38984
	2, 4	38985
	6, 10, 15	38986

Further sets in numerous material combinations can be found in the current Lutz-Jesco price list.

© Lutz-Jesco GmbH 2022
Subject to technical changes.
220121

14 Delivery characteristic curves

This Chapter is intended to give you an idea of the delivery capacity that the dosing pump can achieve at specific back pressures. These delivery capacities were determined on the manufacturer's test stands. They apply at 20 °C (68 °F) for water, at 100 % stroke frequency. The delivery capacity depends on the medium (density and viscosity) and temperature. Since these conditions vary at every installation location, you should calibrate the dosing pump.

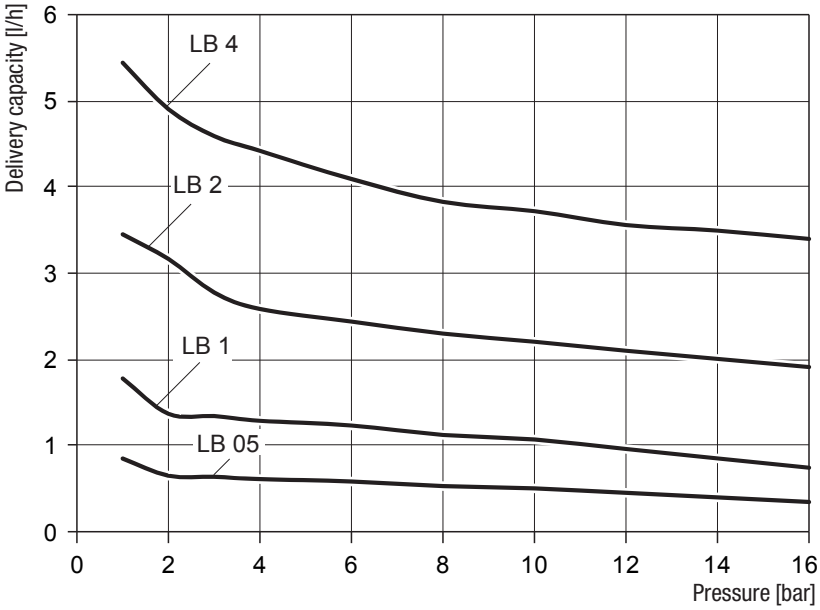

Fig. 21: Delivery characteristic curves MAGDOS LB 05 – 4

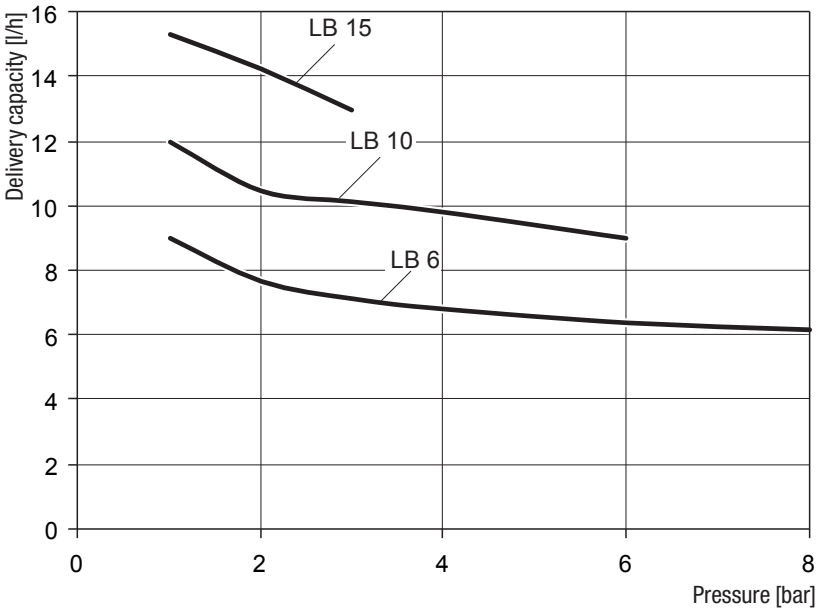

Fig. 22: Delivery characteristic curves MAGDOS LB 6 – 15

© Lutz-Jesco GmbH 2022

15 EU Declaration of Conformity

(DE) EU-Konformitätserklärung
Hiermit erklären wir, dass das nachfolgend bezeichnete Gerät aufgrund seiner Konzipierung und Bauart sowie in der von uns in Verkehr gebrachten Ausführung den einschlägigen grundlegenden Sicherheits- und Gesundheitsanforderungen der aufgeführten EG-Richtlinien entspricht. Bei einer nicht mit uns abgestimmten Änderung am Gerät verliert diese Erklärung ihre Gültigkeit.

(EN) EU Declaration of Conformity
We hereby certify that the device described in the following complies with the relevant fundamental safety and sanitary requirements and the listed EU regulations due to the concept and design of the version sold by us.
If the device is modified without our consent, this declaration loses its validity.

(FR) Déclaration de conformité UE
Nous déclarons sous notre propre responsabilité que le produit ci-dessous mentionné répond aux exigences essentielles de sécurité et de santé des directives UE énumérées aussi bien sur le plan de sa conception et de son type de construction que du modèle que nous avons mis en circulation.
Cette déclaration perdra sa validité en cas d'une modification effectuée sur le produit sans notre accord explicite.

(ES) Declaración de conformidad UE
Por la presente declaramos que, dados la concepción y los aspectos constructivos del modelo puesto por nosotros en circulación, el aparato mencionado a continuación cumple con los requisitos sanitarios y de seguridad vigentes de las directivas de la U.E. citadas a continuación.
Esta declaración será invalidad por cambios en el aparato realizados sin nuestro consentimiento.

(NL) EU-overeenstemmingsverklaring
Ondergetekende Lutz-Jesco GmbH, bevestigt, dat het volgende genoemde apparaat in de door ons in de handel gebrachte uitvoering voldoet aan de eis van, en in overeenstemming is met de EU-richtlijnen, de EU-veiligheidsstandaard en de voor het product specifieke standaard. Bij een niet met ons afgestemde verandering aan het apparaat verliest deze verklaring haar geldigheid.

(PT) Declaração de conformidade UE
Declaramos pelo presente documento que o equipamento a seguir descrito, devido à sua concepção e ao tipo de construção daí resultante, bem como a versão por nós lançada no mercado, cumpre as exigências básicas aplicáveis de segurança e de saúde das directivas UE indicadas.
A presente declaração perde a sua validade em caso de alteração ao equipamento não autorizada por nós.

Bezeichnung des Gerätes:	Magnet-Membrandosierpumpe
Description of the unit:	Solenoid diaphragm dosing pump
Désignation du matériel:	Pompe doseuse à membrane magnétique
Descripción de la mercancía:	Bomba dosificadora magnética de membrana
Omschrijving van het apparaat:	Magneet Membraandoseerpomp
Designação do aparelho:	Bomba doseadora de membrana magnética
Typ: **Type:**	MAGDOS LB
EG-Richtlinien: **EC directives:**	2006/42/EG, 2014/39/EU Die Schutzziele der Niederspannungsrichtlinie 2014/35/EU wurden gemäß Anhang I, Nr. 1.5.1 der Maschinenrichtlinie 2006/42/EG eingehalten. The protective aims of the Low Voltage Directive 2014/35/EU were adhered to in accordance with Annex I, No. 1.5.1 of the Machinery Directive 2006/42/EC.
Harmonisierte Normen: **Harmonized standards:**	DIN EN ISO 12100:2011-03, DIN EN 809:2012-10, DIN EN 61000-6-2:2005, DIN EN 61000-6-3:2007 + A1:2011
Dokumentationsbevollmächtigter: **Authorized person for documentation:**	Lutz-Jesco GmbH

Heinz Lutz
Geschäftsführer / Chief Executive Officer
Lutz-Jesco GmbH
Wedemark, 01.03.2017

Lutz-Jesco GmbH
Am Bostelberge 19
30900 Wedemark
Germany

© Lutz-Jesco GmbH 2022
Subject to technical changes.
220121

16 Declaration of no objection

Please copy the declaration, stick it to the outside of the packaging and return it with the device.

Declaration of no objection

Please fill out a separate form for each appliance!

We forward the following device for repairs:

Device and device type: ..... Part-no.: .....

Order No.: ..... Date of delivery: .....

Reason for repair: .....

.....

.....

Dosing medium

Description: ..... Irritating: ☐ Yes ☐ No

Properties: ..... Corrosive: ☐ Yes ☐ No

We hereby certify, that the product has been cleaned thoroughly inside and outside before returning, that it is free from hazardous material (i.e. chemical, biological, toxic, flammable, and radioactive material) and that the lubricant has been drained.

If the manufacturer finds it necessary to carry out further cleaning work, we accept the charge will be made to us.

We assure that the aforementioned information is correct and complete and that the unit is dispatched according to the legal requirements.

Company / address: ..... Phone: .....

..... Fax: .....

..... Email: .....

Customer No.: ..... Contact person: .....

Date, Signature: .....

© Lutz-Jesco GmbH 2022

17 Warranty claim

Warranty claim

Please copy and send it back with the unit!

If the device breaks down within the period of warranty, please return it in a cleaned condition with the complete warranty claim.

Sender

Company: ..... Phone: ..... Date: .....

Address: .....

Contact person: .....

Manufacturer order no.: ..... Date of delivery: .....

Device type: ..... Serial number: .....

Nominal capacity / nominal pressure: .....

Description of fault: .....

.....

.....

.....

.....

.....

.....

.....

Service conditions of the device

Point of use / system designation: .....

.....

.....

Accessories used (suction line etc.): .....

.....

.....

.....

.....

Commissioning (date): .....

Duty period (approx. operating hours): .....

Please describe the specific installation and enclose a simple drawing or picture of the chemical feed system, showing materials of construction, diameters, lengths and heights of suction and discharge lines.

© Lutz-Jesco GmbH 2022
Subject to technical changes.
220121

18 Index

A
Dimensions 14
General warnings 5
System piping 16
Priming aid 20
Connection ports 22
Structure of the dosing pump 10
Set up information 15
Dimensioning of the system 16
Decommissioning 24

B
Designated use 8
Operation 23
Operating conditions and limits 12

D
Dosing head
- Structure 10
- Orientation 17
- Spare parts.... 29

Dosing head venting facility 19
Tightening the dosing head bolts 25
Dosing media
- Prohibited dosing media 8
- Permitted media temperatures 13

Decommissioning the dosing pump 24
Venting the dosing pump 23
Commissioning the dosing pump 23
Installing the dosing pump 15
Back-pressure valve 19

E
Cemented connection 18
Electrical data 13
Electrical installation 21
Venting 23
Disposal of waste units 24
Spare parts.... 29
External On/Off via Release input 24

F
Expert staff 7
Delivery characteristic curves 30
Delivery capacity data 12
Function description 11

G
Risks stemming from failure to observe the safety instructions 6
Device revision 8
Warranty request 33
Threaded connection 18

H
Handling instructions
- Labelling 4

Notes to the reader 4
Hydraulic connections 17
Hydraulic accessories 19
Hydraulic installation 16

I
Injection nozzle 19
Installation
- Electrical 21
- Hydraulic 16

L
Storage 24
Leakage drain 18
Scope of delivery 10

M
Dimensioned drawings 14
Diaphragms
- Spare parts kits 29
- Change 25

Assembly 15

N
Level control....20

P
Staff qualification 6
Product description 10
Product warranty 8
Pulsation dampener 19

S
Suction pressure regulator 20
Clean suction and pressure valves....26
Safety 5
Safety-conscious working 6
Signal words
- Explanation 4

Control elements 11
Shutting down in an emergency 24
Fault analysis 27
Suspensions 20

T
Technical data 12
Temperatures
- Permitted media temperatures 13
- Permitted media ambient temperature 12

Transportation 24
Rating plate 11

 © Lutz-Jesco GmbH 2022

U

Pressure relief valve 19
Declaration of no objection 32
Prohibited dosing media 8

V

Intended purpose 8
Foreseeable misuse 8

W

Wall bracket 15
Wall mounting 15
Warnings
General warnings 5
Labelling 4
Warning sign
Explanation 4
Maintenance 25
Maintenance intervals 25

Z

Accessories 19
Permitted media temperatures 13

© Lutz-Jesco GmbH 2022
Subject to technical changes.
220121

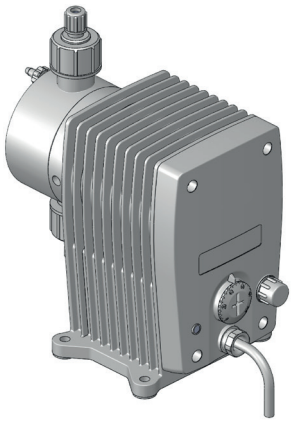

Lutz-Jesco GmbH

Am Bostelberge 19
D-30900 Wedemark

Phone: +49 5130 5802-0
info@lutz-jesco.com
www.lutz-jesco.com

Operating instructions
Solenoid Diaphragm Dosing Pump **MAGDOS LB**

Copyright 2022 by Lutz-Jesco GmbH