en

Translation of the original instructions
Stepper motor-driven diaphragm dosing pump

MEMDOS SMART LAX
MEMDOS SMART LDX
MEMDOS SMART LPX

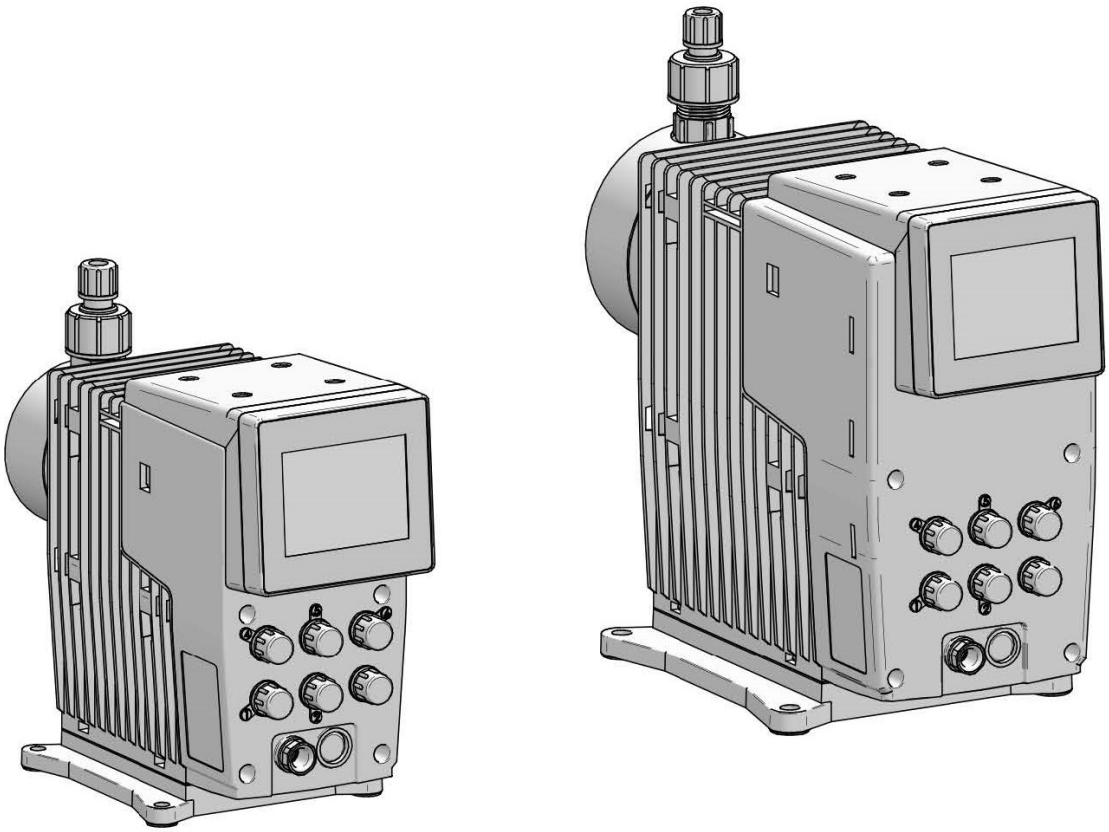

BA-10005-02 / 2 / 10/12/2025

Please read this manual before starting up!

To be retained for future reference.

BA-10005-02 / 2 / 10/12/2025

Table of contents

1 About these operating instructions ... 5
1.1 Target groups ... 5
1.2 General non-discrimination ... 5
1.3 Warnings ... 5
1.4 Action steps ... 6
1.5 Cross-references ... 6
1.6 Latest version ... 6
1.7 Copyright ... 6

2 Safety ... 7
2.1 General warnings ... 7
2.2 Hazards due to non-compliance with the safety instructions ... 8
2.3 Working in a safety-conscious manner ... 8
2.4 Personal protective equipment ... 8
2.5 Personnel qualification ... 8
2.5.1 Personnel tasks ... 9

3 Intended use ... 10
3.1 Notes on product warranty ... 10
3.2 Intended purpose ... 10
3.3 Principles ... 10
3.4 Prohibited dosing media ... 10
3.5 Foreseeable misuse ... 10

4 Product description ... 12
4.1 Properties ... 12
4.2 Scope of delivery ... 12
4.3 Structure of the dosing pump ... 12
4.3.1 General Overview ... 12
4.3.2 Dosing head ... 12
4.3.3 Control elements ... 13
4.4 Function description ... 13
4.5 Conveying characteristics ... 13
4.6 Rating plate ... 13

5 Technical data ... 14

6 Dimensions ... 15
6.1 MEMDOS SMART LDX/LAX/LPX 2 – 30 (size 1) ... 15
6.2 MEMDOS SMART LDX/LAX/LPX 60 – 180 (size 2) ... 16

7 Transportation ... 17

8 Storage ... 18

9 Installation ... 19
9.1 Installation instructions ... 19
9.2 Wall mounting ... 19
9.3 Hydraulic installation ... 20
9.3.1 Design of the system ... 20
9.3.2 System piping ... 20
9.3.3 Hydraulic connections ... 20
9.3.4 Leakage drain ... 22
9.3.5 Connecting dosing head ventilation ... 22
9.3.6 Hydraulic accessories ... 23
9.4 Electrical installation ... 25
9.4.1 Principles ... 25
9.4.2 Description of connection sockets ... 25

10 Control ... 29
10.1 Main menu ... 29
10.2 Info menu ... 29
10.3 Mode menu ... 31
10.3.1 Operating mode settings ... 31
10.4 Service menu ... 32
10.5 Setup menu ... 33
10.5.1 Inputs ... 33
10.5.2 Outputs ... 33
10.5.3 Slowmode ... 34
10.5.4 System ... 34

11 Operation ... 36
11.1 Commissioning the dosing pump ... 36
11.1.1 Venting the dosing pump ... 36
11.1.2 Calibrating the dosing pump ... 37
11.2 Operating modes ... 37
11.2.1 Manual (manual operation) ... 37
11.2.2 Pulse ... 37
11.2.3 Analogue ... 38
11.2.4 Batch ... 39
11.2.5 Net ... 40
11.3 Setting external On/Off via release input ... 40
11.4 Configuring the leak settings ... 40
11.5 Configuring the outputs ... 41
11.6 Configuring level monitoring ... 41
11.7 Activating the password protection ... 42

12 Maintenance ... 43
12.1 Maintenance intervals ... 43
12.2 Tighten up dosing head bolts ... 43
12.3 Diaphragm replacement ... 43
12.3.1 Removing the old diaphragm ... 44
12.3.2 Installing a new diaphragm ... 44
12.4 Cleaning the suction and pressure valve ... 44

13 Troubleshooting ... 45
13.1 Dosing pump not delivering or output too low ... 45
13.2 Dosing pump does not prime ... 45
13.3 Delivery rate varies ... 46
13.4 No stroke movement observed ... 46

13.5 Dosing pump delivery rate too high 47
13.6 Diaphragm is torn or tears too often 47

14 Shutdown and disposal..... 48
14.1 Decommissioning the dosing pump 48
14.2 Shutting down in an emergency 48
14.3 Disposal of old equipment 48

15 Spare parts 49
15.1 Spare parts (size 1)..... 49
15.1.1 Spare parts sets 50

16 Delivery characteristic curves..... 51

17 EU declaration of conformity 52

18 Decontamination declaration..... 53

19 Warranty claim 54

1 About these operating instructions

This document:

- Is part of the product.
- Describes the safe and correct use of the product in all operating phases.
- Must be read completely before the product is commissioned.
- Must be read and applied by every person tasked with working on the product.
- Must be kept for the duration of the service life of the product.
- Must be passed on to any subsequent owner of the product.

1.1 Target groups

Target group	Task
Operator	1. Keep these operating instructions available at the place of use of the product, including for later use. 2. Instruct employees to read and comply with these instructions, especially the safety instructions and warnings. 3. Comply with additional system-related specifications and regulations.
Qualified personnel Trained persons	▶ Read, observe and follow these operating instructions, in particular the safety instructions and warnings.

Table 1: Target groups and their tasks

1.2 General non-discrimination

For better readability, these operating instructions always use the masculine form when referring to persons. However, all genders are addressed equally.

1.3 Warnings

Warnings are intended to help you recognise risks and avoid negative consequences. They are structured as follows in these operating instructions:

Warning sign **SIGNAL WORD**

Type and source of danger

Consequences of non-compliance

▶ A safety precaution to be taken to eliminate the hazard.

Fig. 1: Design of warnings

Signal words

These operating instructions use the following signal words to emphasise the severity of possible injuries if the danger is ignored:

DANGER

Imminent danger

Non-compliance can result in death or serious injury.

WARNING

Possible danger

Non-compliance can lead to death or severe injuries.

CAUTION

Potentially hazardous situation

Non-compliance can result in minor injuries.

NOTE

Potentially hazardous situation

Non-compliance can result in damage to property or malfunctions.

INFORMATION

Information or recommendation

Simplifies handling or extends the service life of the product or system.

Warning signs used

These operating instructions use the following warning signs to indicate the type and source of danger:

General hazard

Danger of electric shock

Danger from corrosive substances

Danger of explosions

Danger from automatic startup

Risk of machine damage or malfunction

1.4 Action steps

Action steps are structured as follows:

✓ This prerequisite must be met before you can start with the action steps.

▶ Single step

Multiple steps in sequence are structured as follows:

1. First step
2. Second step
   ↳ Intermediate result of a step

⚐ Overall result

1.5 Cross-references

Cross-references are marked with an arrow.

Example: (→ Fig. 5)

1.6 Latest version

Please find the latest version of these operating instructions at www.lutz-jesco.com.

1.7 Copyright

The content of these operating instructions and the images contained in them are subject to the copyright protection of Lutz-Jesco GmbH.

2 Safety

2.1 General warnings

The following warnings are intended to help you eliminate the dangers that can arise while handling the product. Risk prevention measures always apply regardless of any specific action.

Safety instructions that warn against risks arising from specific activities or situations can be found in the respective sub-sections.

DANGER

Mortal danger from electric shock!

Wrongly connected or located cables or damaged ones can injure you.

- ▶ Connect the device only to a SCHUKO socket outlet protected by a ground fault circuit interrupter (GFCI).
- ▶ Replace damaged cables without delay.
- ▶ Do not use extension cables.
- ▶ Do not bury cables.
- ▶ Secure cables to avoid damage caused by other equipment.

DANGER

Danger to life through explosions!

The use of dosing pumps without ATEX certification in a potentially explosive atmospheres can result in potentially-fatal explosions.

- ▶ Never use the dosing pump in potentially explosive areas.

WARNING

Danger from unsuitable materials

The materials of the dosing pump and hydraulic parts of the system must be suitable for the dosing medium that is used. Should this not be the case, the dosing media may leak.

- ▶ Make sure that the materials you are using are suitable for the dosing medium.
- ▶ Make sure that the lubricants, adhesives, sealants, etc. that you use are suitable for the dosing medium.

WARNING

Caustic burns or other burns through dosing media!

While working on the dosing head, valves and connections, you may come into contact with dosing media.

- ▶ Use sufficient personal protective equipment.
- ▶ Rinse the dosing pump with a liquid (e.g. water) which does not pose any risk. Ensure that the liquid is compatible with the dosing medium.
- ▶ Release pressure in hydraulic parts.
- ▶ Never look into open ends of plugged pipelines and valves.

WARNING

Danger of automatic start up!

After connecting the mains supply, residual dosing media in the dosing head can spray out.

- ▶ Before connecting the mains supply, connect the dosing lines.
- ▶ Check that all the screw connections have been tightened correctly and are leak-proof.

CAUTION

Danger when changing the dosing medium!

Changing the dosing media can provoke unexpected reactions, damage to property and injury.

- ▶ Clean the dosing pump and the system parts in contact with the media thoroughly before changing the dosing medium.

CAUTION

Increased risk of accidents due to insufficient qualification of personnel!

Dosing pumps and their accessories may only be installed, operated and maintained by personnel with sufficient qualifications. Insufficient qualification will increase the risk of accidents.

- ▶ Ensure that all action is taken only by personnel with sufficient and corresponding qualifications.
- ▶ Prevent access to the system for unauthorised persons.

2.2 Hazards due to non-compliance with the safety instructions

Failure to follow the safety instructions may endanger not only persons, but also the environment and the equipment.

The specific consequences can be:

- Failure of important functions of the product and the associated system
- Failure of required maintenance and repair methods
- Danger for individuals through dangerous dosing media
- Danger to the environment caused by leaking substances

2.3 Working in a safety-conscious manner

In addition to the safety instructions specified in these operating instructions, you must comply with additional safety regulations:

- Accident prevention regulations
- Safety and operating provisions
- Safety provisions for handling dangerous substances (particularly the safety data sheets of the dosing media)
- Environmental protection provisions
- Applicable standards and legislation

2.4 Personal protective equipment

Based on the degree of risk and the type of work you are carrying out, you must use corresponding personal protective equipment. Read the Accident Prevention Regulations and the Safety Data Sheets for the dosing media to find out what protective equipment you need.

The following protective equipment is recommended as a minimum:

Protective goggles

Protective clothing

Protective gloves

Table 2: Protective equipment required

Wear the protective equipment when performing the following tasks:

- Commissioning
- Working on the dosing pump while running
- Shut-down
- Maintenance work
- Disposal

2.5 Personnel qualification

Any personnel who work on the product must have special knowledge and skills.

Anybody who works with the product must meet the conditions below:

- Attendance at all the training courses offered by the owner
- Personal suitability for the respective activity
- Sufficient qualification for the respective activity
- Training into the handling of the device
- Knowledge of safety equipment and the way this equipment functions
- Knowledge of these operating instructions, particularly the safety instructions and sections relevant for the activity
- Knowledge of fundamental regulations regarding health and safety and accident prevention

All persons must have one of the following minimum qualifications:

- Trained as a specialist to work independently with the product
- Sufficient training to work on the product under the supervision and guidance of a qualified specialist

These operating instructions differentiate between the following user groups:

Qualified personnel

Thanks to their professional training, knowledge, experience and knowledge of the relevant specifications, qualified personnel are able to perform the job allocated to them and recognise and/or eliminate any possible dangers by themselves.

Trained persons

Trained persons have received training from the operator about the tasks they are to perform and about the dangers stemming from improper behaviour.

Trained persons have attended all trainings offered by the operator.

2.5.1 Personnel tasks

Incorrect handling of the product can cause severe personal injury and damage to property. Therefore, ensure that all work is carried out by qualified personnel only.

The following table shows which qualifications are required for the corresponding activities.

Qualification	Activities
Qualified personnel	• Assembly • Hydraulic installation • Electrical installation • Maintenance • Repairs • Commissioning • Shut-down • Disposal • Troubleshooting
Trained persons	• Storage • Transportation • Operation • Troubleshooting

Table 3: Personnel tasks

3 Intended use

3.1 Notes on product warranty

Any non-designated use of the product can compromise its function or intended protection. This leads to invalidation of any warranty claims!

Please note that liability is on the side of the user in the following cases:

- The product is operated in a manner that is not consistent with these operating instructions, particularly the safety information, action steps and the intended use.
- People operate the product who are not adequately qualified to carry out their respective activities.
- No original spare parts or accessories of Lutz-Jesco GmbH are used.
- Unauthorised changes are made to the product by the user.
- The user uses different dosing media than those indicated in the order.
- The user does not use dosing media under the conditions agreed with the manufacturer such as modified concentration, density, temperature, contamination, etc.

3.2 Intended purpose

The dosing pump MEMDOS SMART LDX/LAX/LPX is intended for the following purpose: the conveying and dosing of liquids.

3.3 Principles

- Before delivery, the manufacturer inspected the dosing pump and operated it under specific conditions (with a specific dosing medium with a specific density and temperature, with specific pipe dimensions, etc.) Since these conditions vary at every installation location, you must calibrate the dosing pump after delivery (→ Calibrating the dosing pump [▶ 37]).
- DComply with the information pertaining to the operation and ambient conditions (→ Technical data [▶ 14]).
- Any restrictions regarding the viscosity, temperature and density of dosing media must be followed. You must only use dosing media at temperatures above freezing point or below the boiling point of the respective medium.
- The materials of the dosing pump and hydraulic parts of the system must be suitable for the dosing medium that is used. In this connection, note that the resistance of these components can change in dependence on the temperature of the media and the operating pressure.

NOTE

Information on the suitability of materials combined with different dosing media can be found in the Compatibility Chart of Lutz-Jesco GmbH. The information in this resistance list is based on information from the material manufacturers and on expertise obtained by Lutz-Jesco from handling the materials.

As the durability of the materials depends on many factors, this list only constitutes initial guidance on selecting material. In all cases, test the equipment with the chemicals you use under operating conditions.

- The dosing pump is not intended for outdoor use unless appropriate protective measures have been taken.
- Avoid leaks of liquids and dust into the casing and avoid direct exposure to sunlight.
- You must never operate dosing pumps in a potentially explosive atmosphere if they do not have corresponding nameplates or an appropriate EC Declaration of Conformity for potentially explosive atmospheres.

3.4 Prohibited dosing media

The dosing pump must not be used for these media and substances:

- Gaseous media
- Radioactive media
- Solid substances
- Combustible media
- All other media that are not suitable for delivery using this dosing pump

3.5 Foreseeable misuse

The following information describes the non-intended use of the dosing pump or associated system. This section is intended to allow you to detect possible misuse in advance and to avoid it.

Foreseeable misuse is assigned to the individual phases of the product's life cycle:

Incorrect assembly

- Unstable or unsuitable bracket
- Dosing pump bolted wrongly or loosely

Incorrect hydraulic installation

- Suction and pressure lines dimensioned incorrectly
- Unsuitable connection of the pipes due to wrong material or unsuitable connections
- Suction and pressure lines mixed-up
- Damage to threads due to them being tightened too much
- Bending of pipelines

- No free return flow of the pressure relief valve
- Excessive demand due to the pressure differences between the suction and pressure valves
- Through-suction at installation without back-pressure valves
- Damage due to undamped acceleration mass forces
- Exceeding the admissible pressure on the suction and discharge sides
- Using damaged parts

Incorrect electrical installation

- Connecting the mains voltage without a protective earth
- Unsecured mains or one that does not conform to standards
- Not possible to immediately or easily disconnect the power supply
- Wrong connecting cables for mains voltage
- Dosing pump accessories connected to wrong sockets
- Diaphragm monitoring not connected or defective
- Protective earth removed

Incorrect commissioning

- Start-up with damaged system
- Shut-off valves closed at commissioning
- Closed suction or pressure line, e.g. due to blockages
- Personnel was not informed before the start-up
- Recommissioning after maintenance work without restoring all of the protective equipment and fixtures etc.
- Inadequate protective clothing or none at all

Incorrect operation

- Protective equipment not functioning correctly or dismantled
- Modification of the dosing pump without authority
- Ignoring operational disturbances
- Elimination of operational disturbances by personnel without adequate qualifications
- Deposits in the dosing head due to inadequate purging, particularly with suspensions
- Bridging the external fuse
- Operation made more difficult due to inadequate lighting or machines that are difficult to access
- Operation not possible due to dirty or illegible display of the dosing pump
- Delivery of dosing media for which the system is not designed
- Delivery of particulate or contaminated dosing media
- Inadequate protective clothing or none at all

Incorrect maintenance

- Carrying out maintenance during ongoing operation
- Carrying out work that is not described in the operating instructions
- No adequate or regular inspection of correct functioning
- No replacement of damaged parts or cables with inadequate insulation
- No securing against reactivation during maintenance work
- Using cleaning materials that can cause reactions with the dosing media
- Inadequate cleaning of the system
- Unsuitable purging medium
- Unsuitable cleaning materials
- Detergents left in system parts
- Using unsuitable cleaning equipment
- Using the wrong spares or lubricants
- Contaminating the dosing medium with lubricant
- Installing spare parts without following the instructions in the operating instructions
- Blocking venting orifices
- Pulling off sections of the plant
- Contamination at installation without a dirt trap
- Mixing up the valves
- Mixing up the sensor lines
- Not reconnecting all the lines
- Damaging or not installing all the seals
- Not renewing seals
- Not paying attention to safety data sheets
- Inadequate protective clothing or none at all

Incorrect decommissioning

- Not completely removing the dosing medium
- Dismantling lines while the dosing pump is running
- Device not disconnected from the power supply
- Using the wrong dismantling tools
- Inadequate protective clothing or none at all

Incorrect disposal

- Incorrect disposal of dosing media, operating resources and other materials
- No labelling of hazardous substances

4 Product description

4.1 Properties

The MEMDOS SMART LDX/LAX/LPX is a stepper motor-driven diaphragm dosing pump that is used when precise dosing results are required.

It is characterized by the following properties:

- Size 1: Output range from 2.6 – 30.7 l/h, up to 20 bar
- Size 2: Output range from 58.5 – 182 l/h, up to 10 bar
- Power supply 110 – 250 V, 50/60 Hz, IP65, 40 – 85 W
- Microprocessor-controlled drive
- Material finishes PVC, PP, PVDF and stainless steel
- 3.5" touchscreen with multilingual menu
- Display removable (optional)
- Delivery rate precisely adjustable via display
- Supply amount displayed in various units

Also with MEMDOS SMART LPX:

- Two alarm relay outputs
- Diaphragm failure input for leak monitoring
- FLOWCON input
- Diaphragm replacement programme
- Three slow-motion modes
- Venting function
- Storage of messages
- Software backup with four memory locations
- Ethernet interface (optional)

4.2 Scope of delivery

Carefully check the delivery prior to installation and refer to the delivery note to ensure that the delivery is complete and to check for any transport damage. Contact the supplier and/or carrier regarding any questions concerning the delivery and/or transport damage. Do not operate defective products.

The scope of delivery includes:

- MEMDOS SMART LAX, LDX or LPX dosing pump
- Connections for suction and discharge sides
- Operating instructions
- Inspection report and test certificate (optional)
- Accessory kit (optional)

4.3 Structure of the dosing pump

4.3.1 General Overview

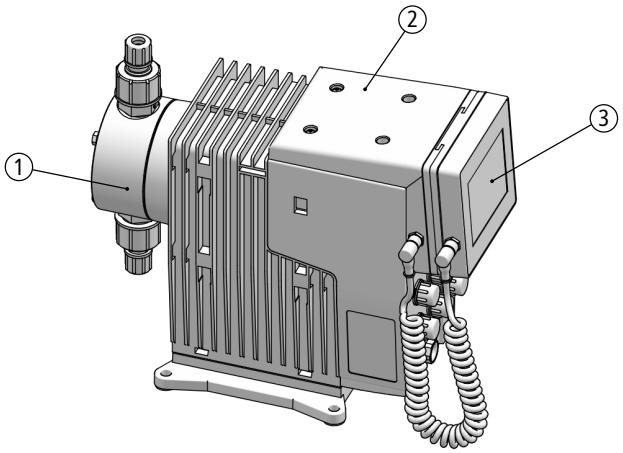

Fig. 2: Overview

1	Dosing head	2	Drive unit
3	Control		

4.3.2 Dosing head

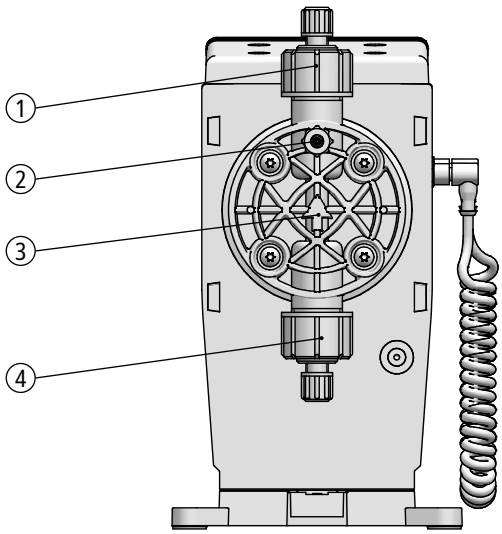

Fig. 3: Dosing head

1	Valve and connection on the discharge side	2	Integrated dosing head ventilation (only MEMDOS SMART LDX/LAX/LPX 2, 5 and 10 with plastic dosing head)
3	Arrow indicating the direction of throughflow of the dosing medium (plastic version only)	4	Valve and connection on the suction side

4.3.3 Control elements

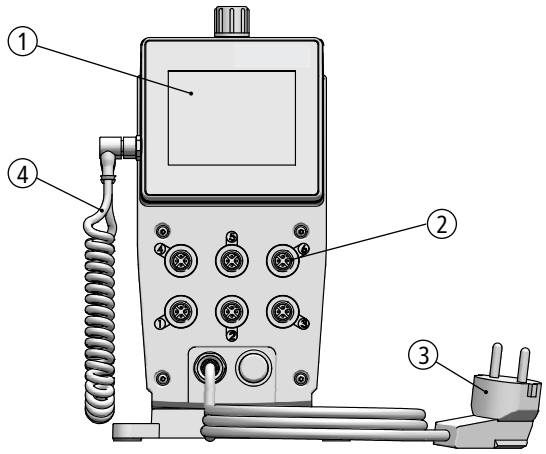

Fig. 4: Control elements

1	Touch display	2	Connection ports
3	Mains cable for power supply	4	Display cable (optional)

4.4 Function description

Dosing pumps are positive displacement pumps. They are used if precisely defined delivery of a medium is necessary. A constant volume per stroke or time is delivered. The system delivers or meters the dosing medium by means of a repeated sequence of suction strokes followed by pressure strokes. This results in a low-pulsation flow.

If the dosing pump is in the suction stroke phase, the diaphragm is pulled into the rear final position. Due to the resulting vacuum in the dosing head, the pressure valve closes, the suction valve opens and dosing medium flows from the suction line into the dosing head.

If the dosing pump is in the pressure stroke phase, the diaphragm is moved into the front final position. Due to the pressure in the dosing head, the suction valve closes and the dosing medium flows through the pressure valve from the dosing head into the pressurised pipe.

4.5 Conveying characteristics

The design of the dosing pump enables it to perform the pressure and suction stroke at different speeds. For low delivery rates, for example, the dosing pump performs the suction stroke at the maximum speed and adjusts the speed of the pressure stroke to match the desired delivery rate. This produces a constant supply stream, which gives you a low-pulsation, smooth dosing.

In addition, in the operating modes *Slow Motion 1*, *Slow Motion 2* and *Slow Motion 3*, it offers the possibility of reducing the suction speed. This allows more viscous media to be dosed more easily and precisely.

INFORMATION

Activating the slow motion modes reduces the dosing accuracy and lowers the maximum suction speed of the dosing pump.

Slow Motion 1: Reduction to 75 %

Slow Motion 2: Reduction to 50 %

Slow Motion 3: Reduction to 25 %

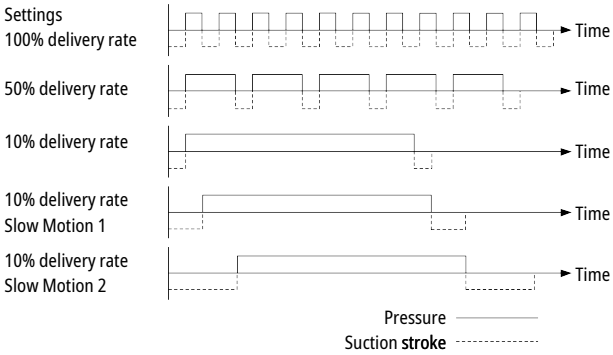

Fig. 5: Conveying characteristics

4.6 Rating plate

The rating plate clearly identifies the product and provides important information such as the manufacturer, product designation, year of manufacture and technical and safety-relevant data. The rating plate must be kept legible for the duration of the service life of the product.

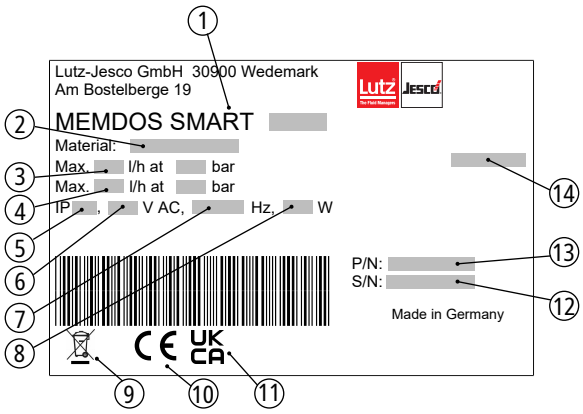

Fig. 6: Rating plate MEMDOS SMART LDX/LAX/LPX

1	Product, type, nominal size	2	Material of the dosing head/seals
3	Maximum delivery capacity at average pressure	4	Maximum delivery capacity at maximum pressure
5	Protection class	6	Power supply
7	Frequency	8	Power consumption
9	WEEE label	10	Label showing conformity with applicable European directives
11	Label showing conformity with applicable UK directives	12	Serial number
13	Part number	14	Month/year of manufacture

5 Technical data

Please note that some of this data only represents guide values. The actual capacity of a dosing pump depends on various factors. For approximate values of the delivery capacity at different pressures, see section → Delivery characteristic curves [▶ 51].

Specification and Unit			MEMDOS SMART LDX/LAX/LPX size							
			2	5	10	20	30	60	100	180
Delivery capacity at max. backpressure		l/h	2.6	5.6	10.4	19.9	30.7	58.5	101.6	182
		ml/stroke	0.29	0.62	1.15	2.21	3.41	6.5	11.29	20.22
Max. delivery pressure		bar	20 (16*)	16	12	8	6	10	7	4
Delivery capacity at average backpressure		l/h	3	6.4	11	20.9	31.6	65	112.7	191
		ml/stroke	0.33	0.71	1.22	2.32	3.51	7.22	12.52	21.22
Average delivery pressure		bar	10	8	6	4	3	5	4	2
Max. stroke frequency		rpm	150							
Suction lift for non-gassing media		mWS	3					5		
Max. supply pressure		mbar	800					500		
Diameter of diaphragm		mm	33	39		54		68	90	
Nominal valve width			DN3**/ DN4	DN4				DN6	DN10	
Power supply			100 – 250 V, 50/60 Hz							
Electrical cable		m	1.8 m (with mains plug)							
Power consumption		W	40					85		
Protection class			IP65 (with covering caps on the connections)							
Insulation class			F							
Materials			PVC, PP, PVDF and 1.4571							
Weight	PVC, PP, PVDF	kg	4 approx.					8 approx.	9 approx.	
	1.4571	kg	5 approx.					10 approx.	14 approx.	
Approved ambient temperature	PVC	°C	5 – 40***							
	PP, PVDF, stainless steel (1.4571)	°C	5 – 45***							
Max. temperature of the medium	PVC	°C	0 – 35							
	PP, PVDF	°C	0 – 60							
	Stainless steel (1.4571)	°C	0 – 80							
Relative humidity		%	max. 90							
Max. sound pressure level		dB(A)	51 – 56							
Viscosity limits		mPa·s	300****/1000*****							

* with a PVC design

** DN3 double ball valves only

*** Use of the dosing pump at ambient temperatures below 5 °C must be checked individually. In such cases, please contact the manufacturer.

**** With a viscosity of ~300 mPa·s and above, you must use spring-loaded valves.

***** If the viscosity is above 1000 mPa·s, this must be checked individually.

6 Dimensions

All dimensions in millimetres (mm).

6.1 MEMDOS SMART LDX/LAX/LPX 2 – 30 (size 1)

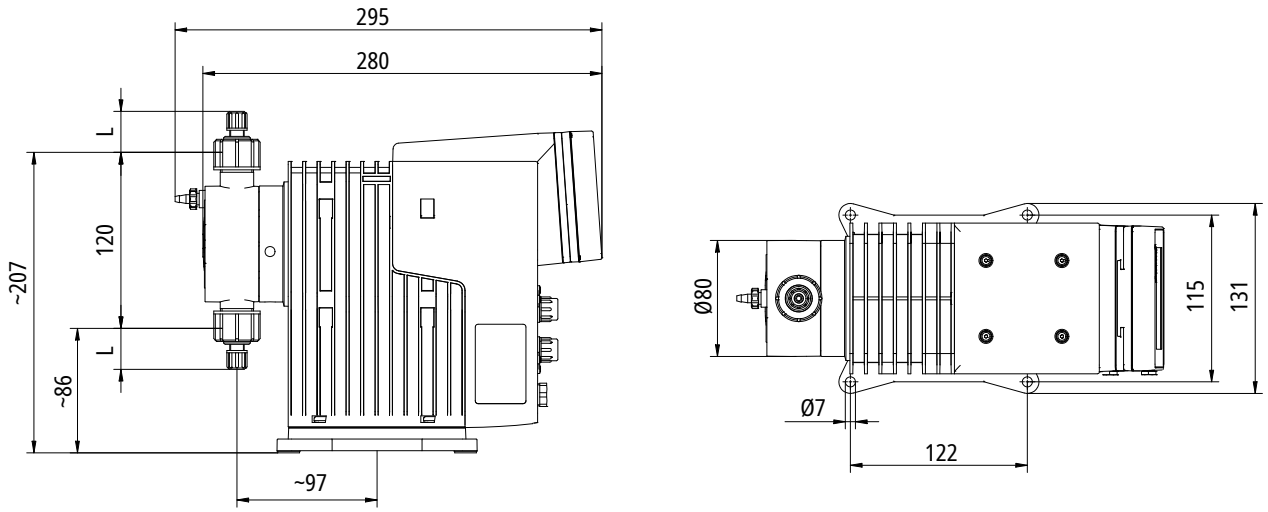

Fig. 7: Dimensions MEMDOS SMART LDX/LAX/LPX 2, 5 and 10 PVC, PP and PVDF

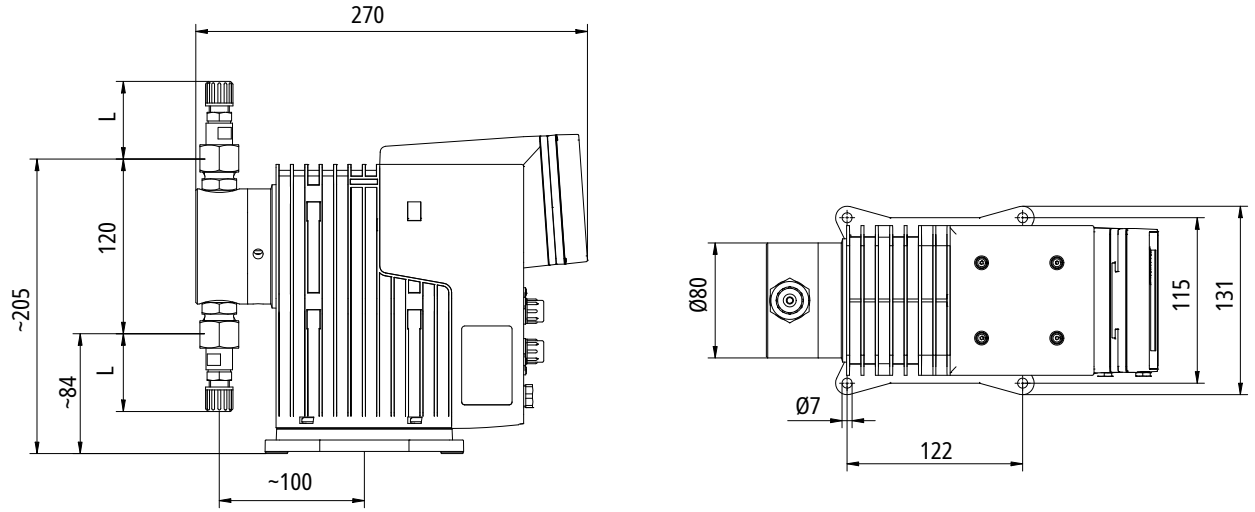

Fig. 8: Dimensions MEMDOS SMART LDX/LAX/LPX 2, 5 and 10 stainless steel

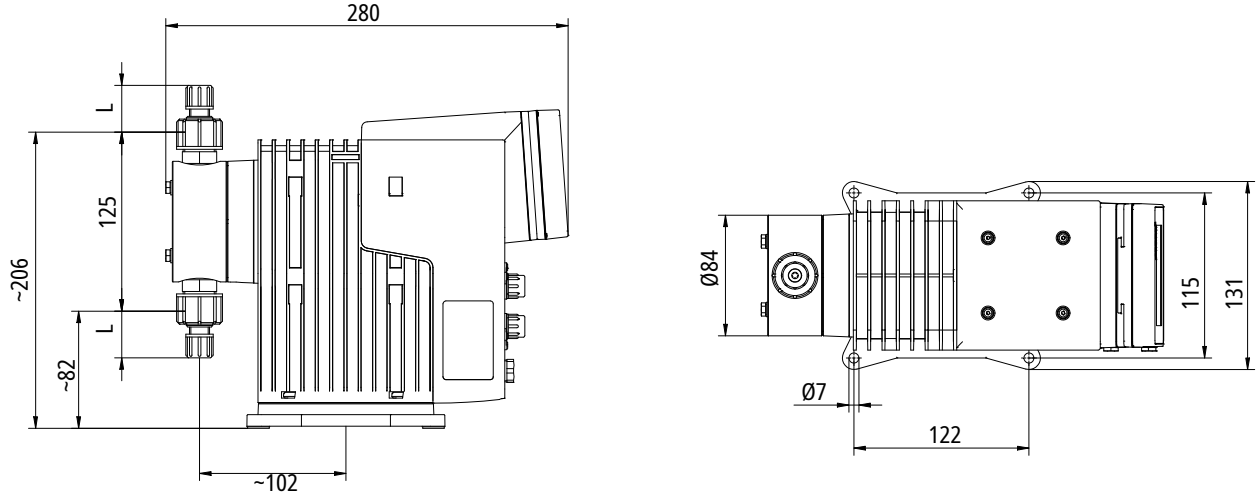

Fig. 9: Dimensions MEMDOS SMART LDX/LAX/LPX 20 and 30 PVC, PP, PVDF and stainless steel

Hose clamp connection	Material	Scale	Nominal valve width	L
LDX/LAX/LPX 2, 5, 10	PVC/PP/PVDF	4/6 mm	DN3 (only for LDX/LAX/LPX 2)/DN4	31
LDX/LAX/LPX 20, 30	Stainless steel	4/6 mm	DN4	50
	PVC/PP/PVDF	4/6 mm	DN4	31
		1/4x3/8"	1/4"	13
		4/9 mm	DN6	34
		6/12 mm	DN6	13
	Stainless steel (1.4571)/PVDF	4/6 mm	DN4	50
		6/9 mm	DN6	54

6.2 MEMDOS SMART LDX/LAX/LPX 60 – 180 (size 2)

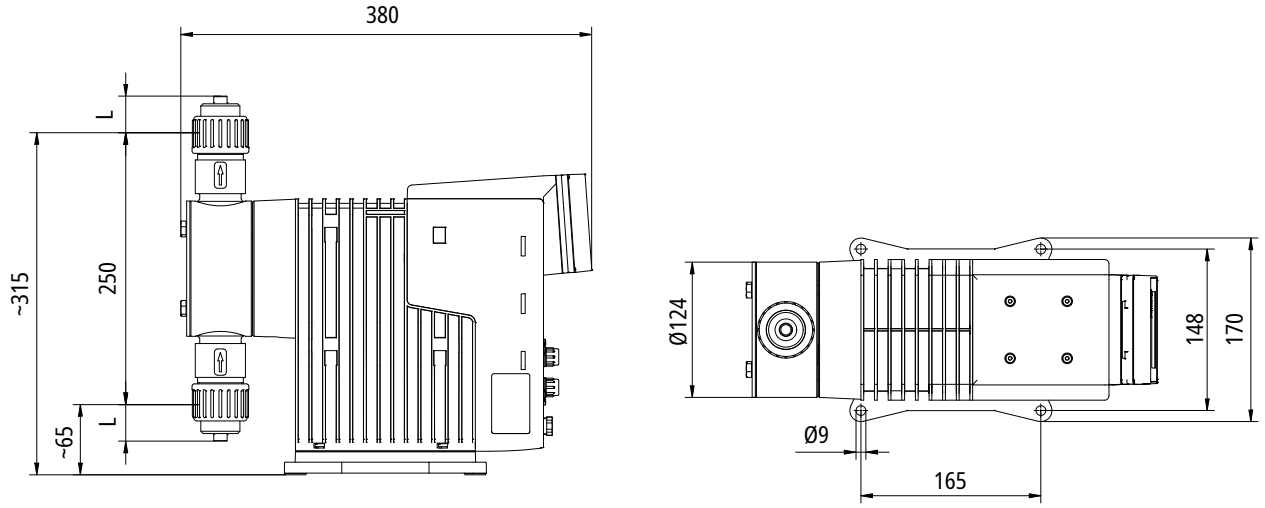

Fig. 10: Dimensions MEMDOS SMART LDX/LAX/LPX 60, 120 and 180

Hose clamp connection	Material	Scale	Nominal width	L
LDX/LAX/LPX 60	PVC/PP/PVDF	6/9 mm	DN6	34
		6/12 mm	DN6	13
	1.4571/PVDF	6/9 mm	DN6	54
LDX/LAX/LPX 100, 180	PVC/PP/PVDF	13/20 mm	DN10	34
	1.4571/PVDF	G3/8	DN10	34

7 Transportation

Please observe the following conditions when transporting the device:

- Clean the device thoroughly before transporting it. In the case of hazardous dosing media, you must also neutralise and decontaminate it.
- Dismantle all accessories.
- Close all openings so that no foreign objects can get into the device.
- Ensure that you send the device in suitable packaging, preferably in the original packaging.
- If the device is to be returned to the supplier/manufacturer, please note the documents to be enclosed (→ Decontamination declaration [▸ 53] and → Warranty claim [▸ 54]).

8 Storage

Storing the dosing pump correctly extends its service life. Avoid negative influences such as extreme temperatures, high humidity, dust, chemicals, etc.

Storage conditions

- The storage place must be cold, dry, dust-free and moderaventilated.
- Temperatures must be between +2°C and +40°C (for PP and PVDF dosing heads, between +2°C and +60°C).
- The relative humidity must be below 90%.

9 Installation

DANGER

Mortal danger from electric shock!

Electrically conductive liquid can enter pump housings, cable screw connections and mains connectors.

▶ Make sure that all protective measures comply at least with the requirements of protection class IP65.

▶ Always set up the dosing pump such that water cannot enter the housing.

CAUTION

Danger of personal injury and material damage!

A dosing pump that is difficult to access represents a danger due to incorrect operation and faulty maintenance.

▶ Install the dosing pump such that it is accessible at all times.

9.1 Installation instructions

When installing, follow the basic principles below:

- The valves must be vertical: Pressure valve at top, suction valve at bottom. in this connection, pay attention to the arrow on the dosing head. The dosing head must be aligned such that the arrow points vertically upwards.
- You should install the dosing pump at a convenient height for operation.
- It must not be installed under the ceiling.
- The frame of foundation for fixing the dosing pump must not be subjected to jolts. The pump must be vibration-free and stable.
- There must be enough free space in the area of the dosing head and the suction and pressure valves for these parts to be easily dismantled if required. The entire space requirement for installation and maintenance is approximately 1 m^2.
- The distance from the sides of the dosing pump to the wall or other dosing pumps or equipment must be at least 3 cm.
- There must be a guaranteed flow of circulating air.
- The maximum ambient temperature must be complied with (→ Technical data [▸ 14]). If necessary, radiant heat from surrounding equipment must be screened.
- Avoid exposure to direct sunlight.
- The dosing pump is not intended for use out of doors unless appropriate protective measures have been taken to prevent dust and water from entering the housing.
- The dimensions of the mounting holes must be observed (→ Dimensions [▸ 15]).
- The tightening torque for the fastening bolts is 1.5 – 2 Nm.

9.2 Wall mounting

The stepper motor diaphragm metering pump has a removable foot that is mounted to and dismounted from the pump without tools. It can be removed by pressing down on the tab and at the same time pushing your foot away from the dosing pump. The foot can be attached to the lower part as well as to the sides of the dosing pump.

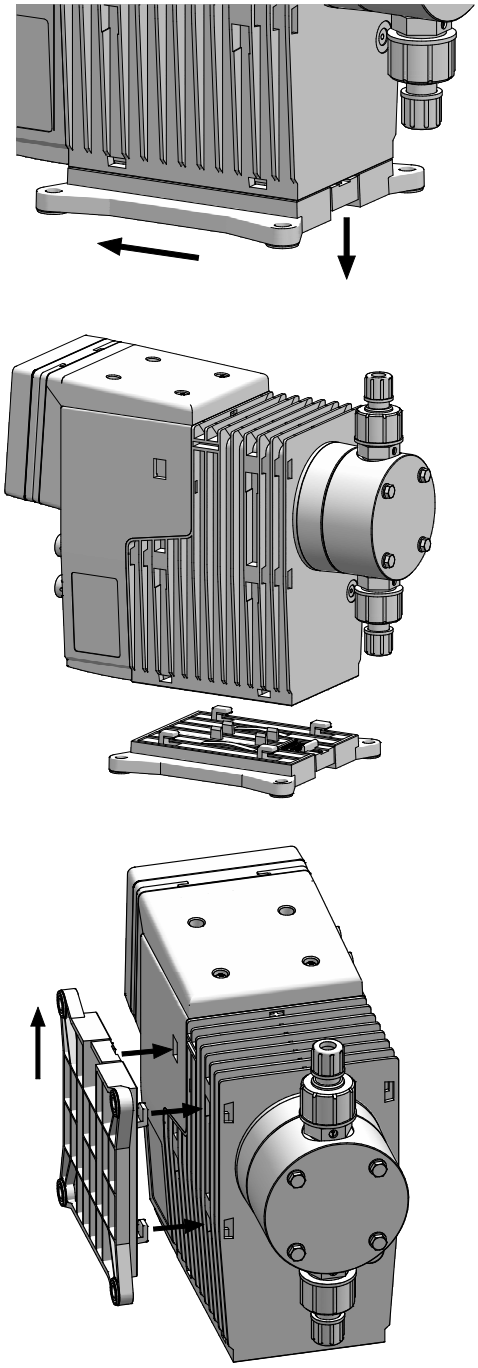

Fig. 11: Mounting stand laterally and display frontally

9.3 Hydraulic installation

In this chapter, you will find information about the hydraulic parts of a system that you should install or that can install additionally. In many cases, you must install hydraulic accessories to be able to use all the functions that the dosing pump offers, to guarantee functional safety or to achieve a high level of dosing precision.

WARNING

Caustic burns or other burns through dosing media!

A diaphragm rupture, blocked pressure lines or the use of material not suitable for the dosing medium can result in the discharge of dosing medium. Depending on the type and hazardousness of the dosing medium, this can result in injury.

- ▶ Wear the recommended personal protective equipment.
- ▶ Make sure that the materials you are using are suitable for the dosing medium.
- ▶ Make sure that the lubricants, adhesives, sealants, etc. that you use are suitable for the dosing medium.
- ▶ Install a leakage drain.
- ▶ Install pressure relief valves.

CAUTION

Danger of personal injury and material damage!

High peak pressures can lead to piping vibrating and cause them to snap. This can result in injury from piping or escaping dosing media.

- ▶ Install pulsation dampeners.

NOTE

Damage to drives due to overloading

The pressure on the pressure side must be higher than on the suction side in order to avoid over-delivery. This could otherwise cause uncontrolled dosing processes and damage to the pipelines and the dosing pump.

- ▶ Ensure that the pressure on the discharge side is at least 1 bar than on the suction side.

NOTE

Locking of threads

Stainless steel and plastic parts (particularly those made of PVC) that are bolted together in a detachable connection (e.g. the dosing head and the valves) can lock. This makes them difficult to release.

- ▶ Before bolting, grease the corresponding parts with a lubricant (e.g. PTFE spray). Ensure that the lubricant is compatible with the dosing medium.

9.3.1 Design of the system

- The dosing pump s technical data must be taken into account and the plant s layout must be set up appropriately (e.g. pressure loss when rating the lines with regard to their nominal diameter and length).
- You must design the entire plant and its integrated dosing pump such that escaping dosing medium due to the failure of wearing parts such as the diaphragm, or to burst hoses does not lead to permanent damage to parts of the system or the premises.
- The leakage opening of the dosing head must be visible so that you can detect a diaphragm rupture. It must be possible for the outflow from the leakage drain to be on a free downwards gradient.
- If you use hazardous dosing media, the installation must be designed such that no disproportionately high consequential damages arise due to dosing media escaping.
- To avoid dosing errors after the end of the process, the dosing pump must be locked hydraulically.
- To allow you to easily inspect the pressure conditions in the system, you should provide connections for pressure gauges close to the suction and pressure valves.

9.3.2 System piping

- The system piping must not exert any force on the connections and valves of the dosing pump.
- This means that steel piping should be connected to the dosing pump by means of flexible pipe sections.
- The nominal diameters of the pipework and the installed fittings should be rated the same as or greater than the nominal diameters of the dosing pump's suction and pressure valves.
- The suction line should be kept as short as possible.
- You should avoid intertwined hoses.
- Avoid loops, since air bubbles can collect.

9.3.3 Hydraulic connections

9.3.3.1 Connecting hose clamp connection

Choose the hose connection according to the condition of the hose (material, inner diameter, wall thickness) in order to ensure maximum pressure resistance.

Size 4/6 and 6/9

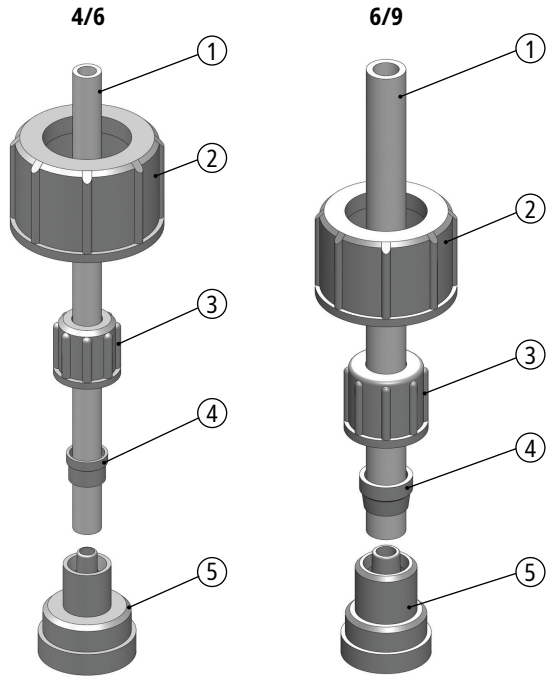

Fig. 12: Hose clips 4/6 and 6/9 (internal and external diameters in mm)

1. Cut the hose (1) to the appropriate length neatly and at an exact right angle.
2. Place a gasket that is suitable for the dosing medium between the connection (5) and the valve.
3. Screw the connecting piece to the dosing pump's valve using the union nut (2).
4. Thread the union nut (3) and the clamping ring (4) onto the hose.
5. Plug the hose all the way in to the grommet of connection piece.
6. Push the clamping ring onto the grommet of connection piece and screw it with the union nut.
7. Carry out the same procedure with the connection to the dosing pump's other valve.

⚐ Hose clamp connection connected.

Size 6/12

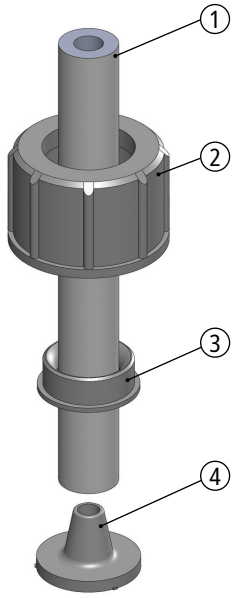

Fig. 13: Hose clip 6/12 (internal and external diameters in mm)

Size 6/12 hose clips only have a union nut. It clamps the hose onto the grommet of the connection piece and at the same time fastens on the dosing pump's valve.

1. Cut the hose (1) to the appropriate length neatly and at an exact right angle.
2. Place a gasket that is suitable for the dosing medium between the connection (4) and the valve.
3. Push the union nut (2) and the cutting ring (3) over the hose.
4. Press the end of the hose onto the grommet of connection piece.
5. You can do this more easily by moistening the end of the hose on the inside or applying some lubricant to the grommet in the cone area. You should push at least two thirds of the hose onto the grommet of the connection piece.
6. Push the cutting ring over the hose into the cone area on the grommet of connection piece.
7. Screw the union nut onto the valve of the dosing pump.

⚐ Hose clamp connection connected.

9.3.3.2 Connecting cemented connection

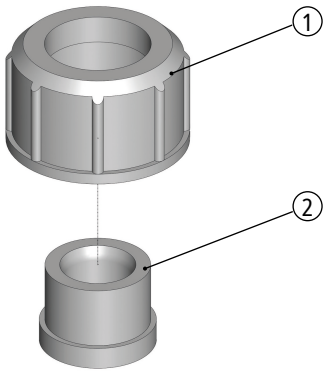

Fig. 14: Cemented connection

1. Cut the PVC tube to length.
2. Push the union nut (1) onto the tube.
3. Stick the bonded coupling sleeve (2) to the tube (follow the instructions of the adhesive manufacturer).
4. Screw the union nut onto the valve of the dosing pump.
5. Use a gasket that is suitable for the dosing medium.

⚐ Cemented connection connected.

9.3.3.3 Connecting threaded connection

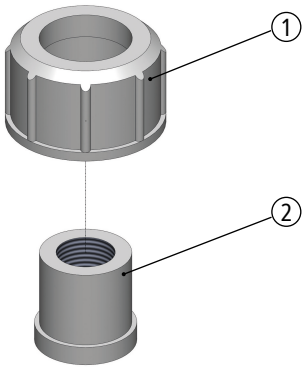

Fig. 15: Threaded connection

1. Cut the tube to length.
2. Cut the thread (2) onto the end of the tube.
3. Push the union nut (1) onto the tube.
4. Seal the thread. When choosing your sealing material, take into account its resistance to material, temperature and pressure.
5. Screw the union nut onto the valve of the dosing pump.
6. Use a gasket that is suitable for the dosing medium.

⚐ Threaded connection connected.

INFORMATION

Under normal conditions, you only need to screw the hydraulic connections finger-tight. However, due to the material settling, the pretension of the screw connection can slacken. This means that you must re-tighten the screw connection before carrying out commissioning.

9.3.4 Leakage drain

Lutz-Jesco GmbH dosing pumps are produced to the highest of quality standards with a long service life. However, some parts are subject to operational wear. This is the case particularly with the diaphragms that are continuously subjected to forces during the suction and discharge strokes and to the effects of the dosing medium.

If a diaphragm ruptures, the dosing medium starts to leak. This leakage is drained via the leakage opening. On the flange of the dosing head, there are three openings for this purpose. Depending on the alignment of the dosing pump, the leakage is drained via the downward opening.

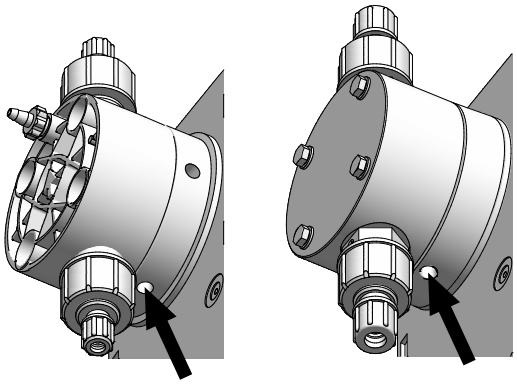

Fig. 16: Openings of the leakage drain

NOTE

Damage to drives due to effervescent media

If a hose is connected to the leakage drain and it is routed back into the dosing tank, effervescent media can enter the drive and damage it.

- ▶ Collect the leakage in a collecting pan.
- ▶ As an alternative, you can route the leakage back to the dosing tank using a funnel. You should install the funnel at an adequate distance from the leakage opening.

9.3.5 Connecting dosing head ventilation

Dosing heads of the MEMDOS SMART LDX/LAX/LPX 2, 5 and 10 have integrated dosing head venting (except stainless steel dosing heads).

For the venting procedure → Venting the dosing pump [▶ 36]).

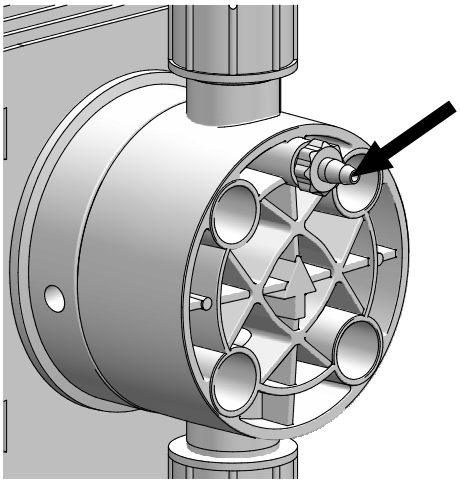

Fig. 17: Dosing head ventilation with hose connection

1. Connect a 4/6 hose to the dosing head venting facility.
2. Route the other end of the hose into the dosing tank or a collecting tank.

⚐ Dosing head ventilation connected.

9.3.6 Hydraulic accessories

The following chapter is intended to give you an overview of installation options.

Please note that these operating instructions are no substitute for the instructions supplied with the accessories in each case. The corresponding documentation supplied with the product applies to safety information and provides exact instructions on assembly.

9.3.6.1 Injection nozzle

If the pressure line enters a main line, it is advisable to install an injection nozzle.

Injection nozzles have three main functions:

- Dosing the medium into a main line
- Preventing flowback into the pressure line through a non-return valve

Notes on assembly:

- Double-ball injection nozzles must be installed into the main line vertically from the bottom. You can install hose and spring-loaded injection nozzles any way you like.
- With dosing media that tend to crystallize, it is advisable to carry out installation into the main line from the bottom. This prevents air bubbles from being trapped.
- Many dosing media tend to contaminate the injection nozzles, which can lead to blockages. In cases like this, it is advisable to install an injection nozzle that is easy to dismantle and block off.

9.3.6.2 Contact water meter

The contact-type water meter measures the throughflow in a pipe and sends a pulse to the dosing pump, which then starts dosing. This means that ideal proportional dosing is also possible with large throughflow fluctuations.

The contact water meter is connected to connection port 2 (→ Connection socket 2 [▶ 26]).

9.3.6.3 Pressure-relief valve

Pressure-relief valves have an important safety function for protecting the dosing pump and the associated pipes and fittings. The dosing pump can generate a pressure that is many times the rated one. A blocked pressure line can lead to dosing medium escaping.

An improperly high pressure can occur if:

- The shut-off valves are closed even though the dosing pump is running
- Pipes block

At an appropriate pressure, a pressure-relief valve opens a bypass line and protects the system in this way from damage caused by over-pressure.

Notes on assembly:

- The line for returning dosing medium from the pressure-relief valve must be routed to the dosing tank or to a collecting pan.
- The pressure in the dosing tank must not be too high so that it is possible to accommodate the returned dosing medium.
- As an alternative, the system can return dosing medium into the suction line in front of the dosing pump. In this case, there must not be a non-return valve or a foot valve in the suction line.
- You should install the pressure-relief valve as close as possible to the dosing head.

9.3.6.4 Back-pressure valve

Back-pressure valves are required in the following cases:

- There are considerably fluctuating system pressures
- The pressure on the suction side is higher than on the discharge side or if you intend to carry out dosing into depressurized lines

In cases like this, if you do not use a back-pressure valve, imprecise dosing results will occur or overloading will result. The back-pressure valve solves these problems by generating a defined, constant back-pressure.

In some circumstances, a back-pressure valve is unnecessary if you use a hose injection nozzle and if the backpressure that it generates is adequate.

9.3.6.5 Pulsation dampener

Pulsation dampeners have the following functions:

- Damping pulsating delivery flows for processes that require low-pulsation dosing,
- Reducing the throughflow resistance with long pipelines

When installed on the suction side:

- Damping of acceleration mass forces and with this reduction of wear on the dosing pump
- Preventing cavitation (pull-off of the liquid column) due to too high acceleration

However, pulsation dampeners also have important safety functions, since they prevent pressure peaks from arising that lead to piping vibrating and cause them to snap.

This problem can occur:

- With the high amplitudes of the vibrations
- When using long pipes (the severity of the pulsation increases with the length of the pipe)
- When using rigid piping instead of elastic hoses

Notes on assembly:

- You should carry out assembly in the direct vicinity of the location where you want to damp the pressure peaks (directly in front of the suction valve or directly behind the pressure valve).
- Pulsation dampeners should be installed with throttle valves or back-pressure valves installed directly behind them. By setting the valves appropriately, you can further-optimise damping of the pulsations.
- To prevent unnecessary pipe friction losses, you should lay the connecting line straight and in accordance with the rated width of the pulsation dampener.
- You must separately fasten relatively large pulsation dampeners and ones with hose connections.
- Pipelines must not transfer any mechanical tensions onto the pulsation dampener.

9.3.6.6 Priming aid

Priming aids are particularly advisable:

- In the case of dosing pumps with small volumetric displacements per stroke or with low stroke length settings
- With high suction hights
- With highly dense dosing media
- At priming for the first time due to dry valves and air in the suction line and the dosing head
- In dosing systems with frequent downtimes

Further advantages resulting from priming aids:

- Preventing cavitation in the suction line
- Gas removal
- Optical dosing control with small amounts
- Smoothing of the suction flow

9.3.6.7 Level control

Level monitoring of suction-side feeding of the dosing medium to prevent the tank being sucked dry and to ensure that it can be topped up again in good time.

9.3.6.8 Dosing of suspensions

When dosing suspensions, the dosing head must be rinsed regularly to prevent depositing. To do this, you install a feed line for the rinsing medium (water) in the suction side installation.

9.3.6.9 Suction pressure regulator

A suction pressure regulator may be necessary if the suction-side installation of the system demonstrates a varying suction pressure or supply pressure:

- Dosing pumps that are installed above dosing tanks deliver less as the tank empties, since the suction head increases.
- Dosing pumps that are installed below dosing tanks deliver less as the tank empties, since the positive delivery pressure reduces.

Further problems that can occur:

- Greater wear on the dosing pump, e.g. diaphragm rupture due to the effects of heavy forces with particularly high tanks and high-density dosing media.
- Idling of the dosing tank in the case of a diaphragm rupture or pipe breakage
- Impermissibly high forces in the pump transmission that occur when dosing pumps receive the dosing medium directly from the pressure line
- Reduced performance or destruction of fittings due to cavitation with long suction lines

Installing a suction pressure regulator is a remedy for the problems above. The suction pressure regulator is opened by the dosing pump's suction pressure. This ensures that no dosing medium can flow if the dosing pump is not running or no vacuum can be generated following a pipe fracture.

Notes on assembly:

- When using a large suction pressure regulator, you should provide a pulsation dampener on the suction side.

9.3.6.10 Flow sensor FLOWCON LP

The FLOWCON LP flow meter was specially developed for monitoring oscillating volume flows. The function is based on the evaluation of the pulsating dosing behaviour typical to dosing pumps. With stepper motor-driven dosing pumps, only the signal on the suction side can be evaluated; the flow on the discharge side remains relatively constant.

During the suction stroke, a float is lifted from the flowing fluid, thus activating a reed switch. Setting the switch point adapts the function to the size of the dosing pump and the viscosity of the medium.

This makes it possible not only to monitored whether the dosing pump is delivering fluid, but also whether the set dosing capacity is achieved. With constant operating conditions, the reproducibility remains at 10 – 20%. The FLOWCON can only be used for size 1 at up to 30 l/h.

For the electrical connection of the FLOWCON, see section Connection socket 6 (only LPX) [▶ 27].

NOTE

Please follow the operating instructions for the FLOWCON LP flow meter. It contains instructions regarding operation using the MEMDOS SMART LPX dosing pump.

9.4 Electrical installation

DANGER

Mortal danger from electric shock!

If there is an electrical accident, you must disconnect the dosing pump from the mains as quickly as possible.

▶ Install an emergency stop switch or integrate the dosing pump into the plant safety concept.

CAUTION

Danger of automatic start up!

The dosing pump does not have an ON/OFF switch and may start to pump as soon as it is connected to the mains supply.

▶ Install an emergency stop switch or integrate the dosing pump into the plant safety concept.

NOTE

Damage due to incorrect mains voltage

The dosing pump can be damaged if you connect it to the wrong mains voltage.

▶ Observe the information on the mains supply that is given on the rating plate.

NOTE

Insufficient electromagnetic compatibility

When you connect the dosing pump to a socket without an attached protective earth, it is not possible to guarantee the interference radiation and interference immunity according to EMC regulations.

▶ Only connect the dosing pump to sockets with an attached protective earth.

9.4.1 Principles

- The dosing pump has a 110 – 250 V AC 50/60 Hz wide-range power supply unit.
- The electrical connection comply with local regulations.
- The dosing pump must be plugged into a grounded power outlet.
- To avoid dosing errors at the end of the process, the dosing pump must be locked electrically.
- The dosing pump must not be operated by switching the mains voltage on or off.
- Signal cables must not be laid parallel to high-voltage current lines or mains cables. You must route supply and signal lines in separate channels. An angle of 90° is required at line crossings.

9.4.2 Description of connection sockets

The MEMDOS SMART LDX has 3 and the MEMDOS SMART LAX has 4 sockets that are A-coded. The MEMDOS SMART LPX has 7 sockets. Sockets 4 and 5 are B-coded; sockets 1, 2, 3, 6 and 7 are A-coded.

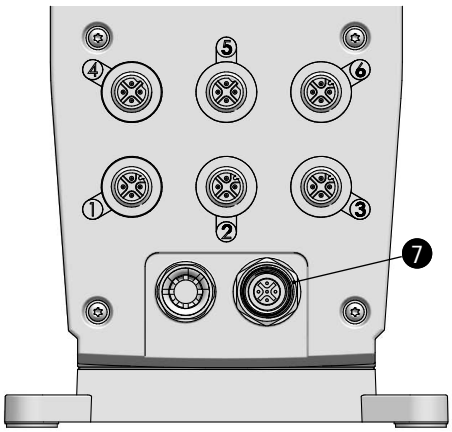

Fig. 18: Connection sockets 1– 7 MEMDOS SMART LDX/LAX/LPX

No.	Connection socket
1	Release input and optocoupler output
2	Pulse input and analogue input
3	Level input (early warning and main alarm)
4	Fault reporting relay output 1 (only LPX)
5	Fault reporting relay output 2 (only LPX)
6	FLOWCON and diaphragm rupture input (LPX only)

No.	Connection socket
7	Analogue output (LAX/LPX) and Modbus RTU (LPX only)

Table 4: Description of connection sockets

9.4.2.1 Connection socket 1

Connection socket 1 is equipped with an optocupler output and a release input. The optocupler can be configured for stroke feedback or a fault message. The connections and switch data are listed in the following tables.

Pin	Function
Optocoupler (pin 1 and 2)	Max. 30 V DC, max. 5 mA
Release input (pin 3 and 4)	Potential-free circuit, Open NC or closed NO Freely programmable

Table 5: Technical data connection port 1

Pin	M12x1 (A-coded)	Assign-ments	Connection	Cable colour*	
1		Opto-coupler collector (+)	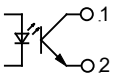	Brown	BN
2		Opto-coupler emitter (-)		White	WH
3		Ground (GND)	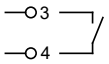	Blue	BU
4		External On/Off		Black	BK

Table 6: Connection socket 1

* Applies to cable colours of Lutz-Jesco GmbH cables. No liability is accepted for cables from other manufacturers.

Stroke feedback output

At the stroke feedback output, the dosing pump reports back each executed stroke to the pulse input of another dosing pump or PLC. In this way, it is possible to network several dosing pumps and to trigger synchronized dosing strokes.

The stroke feedback output can continue to be used e.g. to evaluate the signal in a PLC (stroke counting for batch mode).

The stroke feedback output in dynamic pulse mode and water meter mode is only for evaluation purposes and not for forwarding the signal.

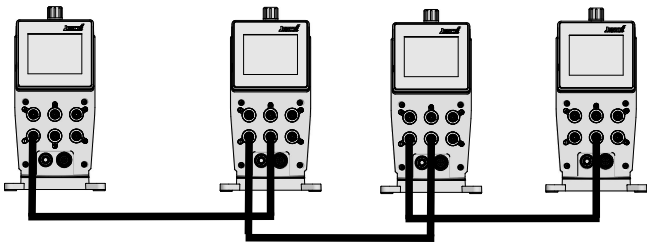

Fig. 19: Synchronisation of several dosing pumps by means of stroke feedback and pulse control

Fault reporting optocupler

The optocupler will notify dosing pump faults upon activation of this function. The message can be evaluated e.g. with a PLC.

Release input

Using the release input, it is possible to start or stop the dosing pump externally.

For information on setting the release input function → Setting external On/Off via release input [▶ 40].

9.4.2.2 Connection socket 2

Analogue input (LAX/LPX only)

The analogue input makes it possible to control the delivery capacity by means of a 0/4 – 20 mA signal. The delivery capacity is regulated via the stroke frequency.

- 0/4 – 20 mA-Signal
- settable
- Current range variable
- Working resistance: 200 Ohm (because of the electronic fuse), not potential-free

For information on setting the *Analog* operating mode → Operating mode settings [▶ 31].

Pin	M12x1 (A-coded)	Assign-ments	Connection	Cable colour*	
1				Brown	BN
2		(+)0/4 – 20 mA		White	WH
3		Ground (GND)		Blue	BU
4	–	+5 V DC	–	Black	BK

Table 7: Connection socket 2

* Applies to cable colours of Lutz-Jesco GmbH cables. No liability is accepted for cables from other manufacturers.

Pulse input (LDX/LPX only)

The pulse input enables the control of the delivery rate by pulses. The system regulates the delivery capacity by means of the dosing pump's stroke frequency and number of strokes in dependence on the number of pulses and the pulse spacing.

- On-site, potential-free switching

- For potential-free closing contact, e.g. a contact water meter
- 5 V DC supply voltage (current across all connections limited to a total maximum of 50 mA)
- Pulse length min. 25 ms

For information on setting the *Pulse* operating mode → Operating mode settings [▶ 31].

Pin	M12x1 (A-coded)	Assign-ments	Connection	Cable colour*	
1		Pulses	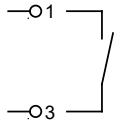	Brown	BN
2		(+)0/4 – 20 mA		White	WH
3		Ground (GND)		Blue	BU
4	–	+5 V DC	–	Black	BK

Table 8: Connection socket 2

* Applies to cable colours of Lutz-Jesco GmbH cables. No liability is accepted for cables from other manufacturers.

9.4.2.3 Connection socket 3

Level input

Connection for level monitoring of a dosing tank (e.g. a suction line with a float switch).

- 5 V DC supply voltage (current across all connections limited to a total maximum of 50 mA)
- Alert and main alarm
- Potential-free circuit
- Programmable NC or NO contact

For information on setting the level input monitoring function → Configuring level monitoring [▶ 41].

Pin	M12x1 (A-coded)	Assign-ments	Connection	Cable colour*	
1		Pre-alarm	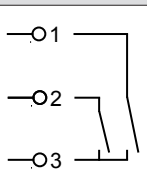	Brown	BN
2		Main alarm		White	WH
3		Ground (GND)		Blue	BU
4	–	+5 V DC	–	Black	BK

Table 9: Connection socket 3

* Applies to cable colours of Lutz-Jesco GmbH cables. No liability is accepted for cables from other manufacturers.

9.4.2.4 Connection sockets 4 and 5 (LPX only)

Alarm relay output

Using the alarm relay, it is possible to forward outwards disturbances on the dosing pump.

- Potential-free changeover contact
- Max. 250 V AC, 2.5 A bzw. max. 30 V DC, 2.5 A

For information on setting the alarm relay function → --- FEHLENDER LINK ---.

Pin	M12x1 (B-coded)	Assign-ments	Connection	Cable colour*	
1	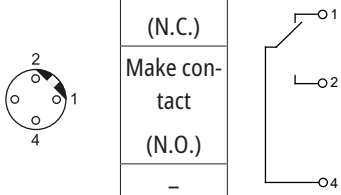	Break contact (N.C.)		Brown	BN
2		Make con-tact (N.O.)		White	WH
3		–		Blue	BU
4		Changeov er contact		Black	BK

Table 10: Connection sockets 4 abd 5

* Applies to cable colours of Lutz-Jesco GmbH cables. No liability is accepted for cables from other manufacturers.

9.4.2.5 Connection socket 6 (only LPX)

Diaphragm rupture input

A connection to a leak sensor in the flange of the dosing head to monitor for a possible diaphragm rupture.

Dosing control input

The optionally-available FLOWCON LP can be connected to connection port 6. It allows you to monitor the dosing medium flow motion after a dosing pump stroke.

- 5 V DC supply voltage (current across all connections limited to a total maximum of 50 mA)

Pin	M12x1 (A-coded)	Assign-ments	Connection	Cable colour*	
1		FLOWCON 2	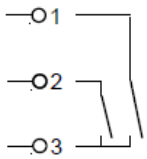	Brown	BN
2		Leak sensor		White	WH
3		Ground (GND)		Blue	BU
4		+5 V DC		Black	BK

Table 11: Connection socket 6

* Applies to cable colours of Lutz-Jesco GmbH cables. No liability is accepted for cables from other manufacturers.

9.4.2.6 Connection socket 7 (LAX/LPX only)

Connection socket 7 has an analogue output (LAX/LPX) and an RS485 Modbus input (LPX only).

Pin	M12x1 (A-coded)	Assign-ments	Connection	Cable colour*	
1	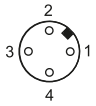	(+)0/4 – 20	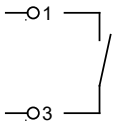	Brown	BN
2		RS485**		White	WH
3		Ground (GND)		Blue	BU
4		RS485 +		Black	BK

Table 12: Connection socket 7

* Applies to cable colours of Lutz-Jesco GmbH cables. No liability is accepted for cables from other manufacturers.

Analogue output

The analogue output makes it possible to output the configured delivery capacity by means of a 0/4 – 20 mA signal or forward the analogue signal to another pump, either directly, scaled or as a fixed value (→ Analogue output [▶ 33]). The delivery capacity is regulated via the stroke frequency.

- 0/4 – 20 mA-Signal
- settable
- Current range variable
- Assignment of pins 1 and 3

BUS input Modbus RTU (RS485)

The input can be programmed either as a release or pulse input and the dosing pump can be operated with the aid of a higher-level controller.

- Potential-free contact
- Connection M12x1 cable with plug connector, A-coded
- Assignment of pins 2 and 4

10 Control

You operate and configure the pump using the touch display. The display is permanently connected to the pump as standard. Optionally, it can be configured as a detachable version with a display cable so that it can be removed from the display holder for operation. With the detachable display module, you can control and operate any number of other MEMDOS SMART dosing pumps. To do this, simply connect the display module to another dosing pump.

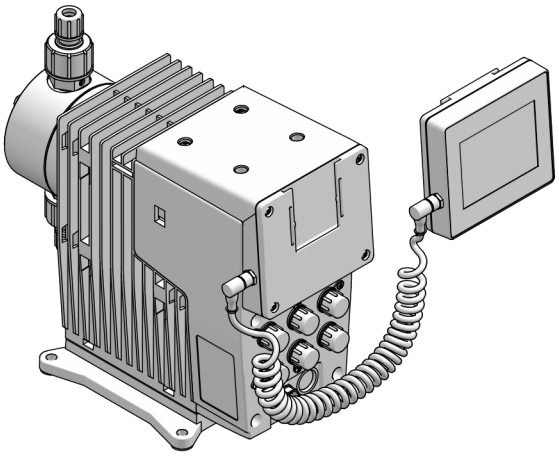

Fig. 20: Removable touch display

The start screen is structured as follows:

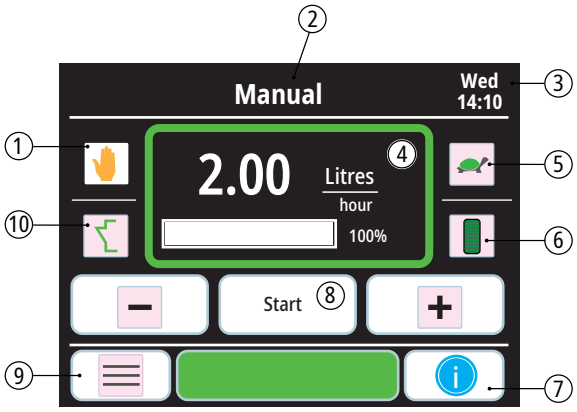

Fig. 21: Start screen

1	Operating mode symbol	2	Current operating mode
3	Time and date	4	Currently set flow rate with unit of measurement
5	Slowmode	6	Level indicator
7	Information field	8	Start/Stop
9	Menu	10	Release input

10.1 Main menu

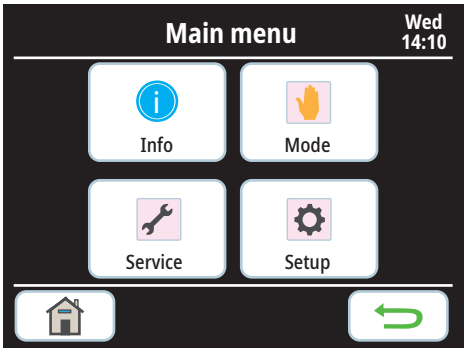

Fig. 22: Main menu

Press the button on the start screen to call up the main menu. The dosing pump does not interrupt the dosing process. Only when you switch to a different operating mode does the dosing pump stop. Press the button to return to the start screen. Use the button to go back. The following can be selected in the main menu:

- Info: Reading out information about the pump and pump messages
- Mode: Selection of different pumping modes
- Service: Calibration options of the pump and settings (of accessories)
- Setup: System settings and setting of inputs and outputs

10.2 Info menu

In the Info menu, the pump name and type, the serial number as well as the software version with programming date, the current system time, the date as well as the analogue input signal are displayed. In addition, the operating time of the pump is displayed with the corresponding number of strokes and the stroke frequency. The stroke volume ex works and the calibrated stroke volume of the dosing pump can also be read in this menu. Furthermore, information about the pin assignment and the type of socket is given for each connection socket.

Examples from the Info menu:

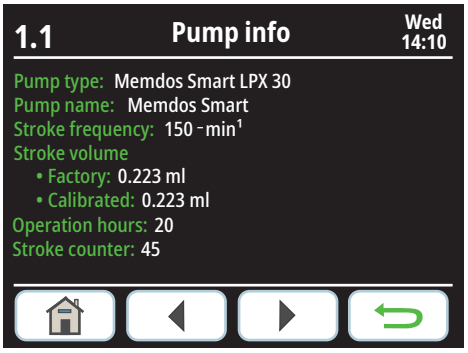

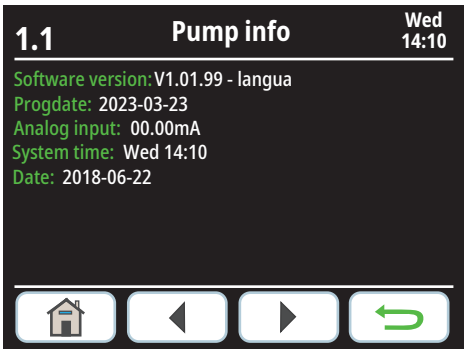

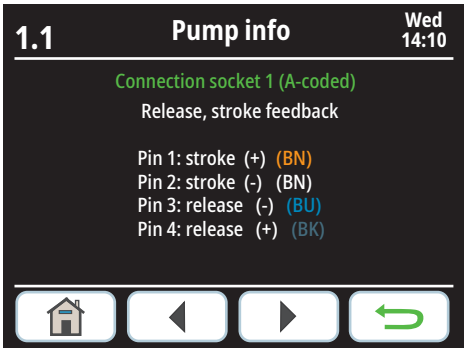

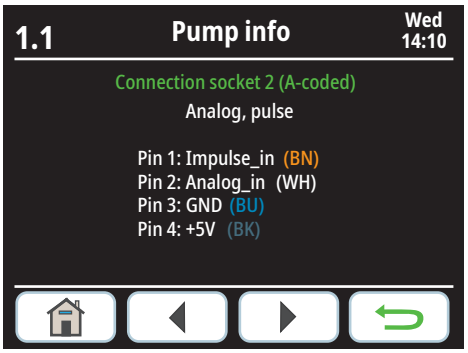

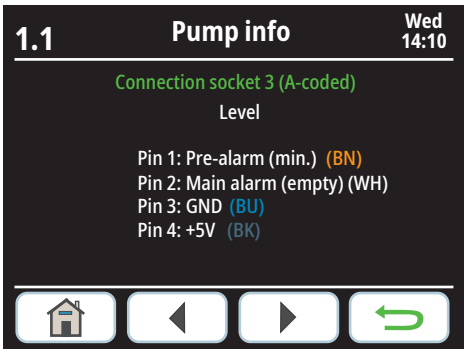

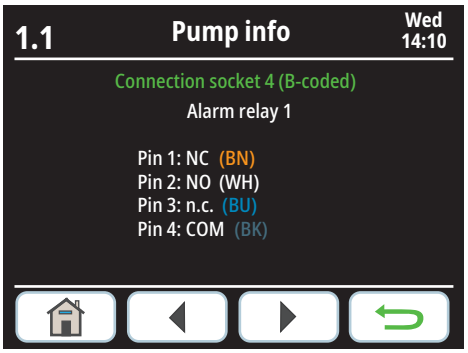

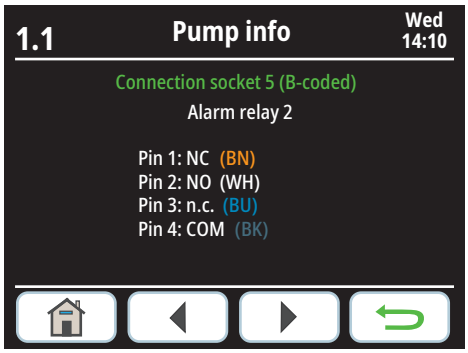

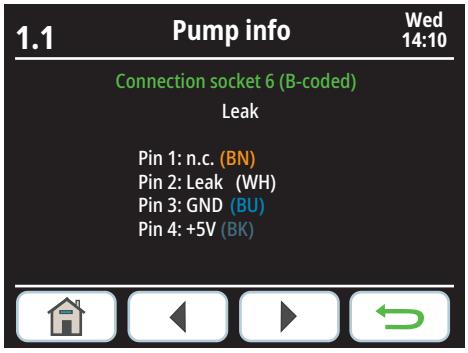

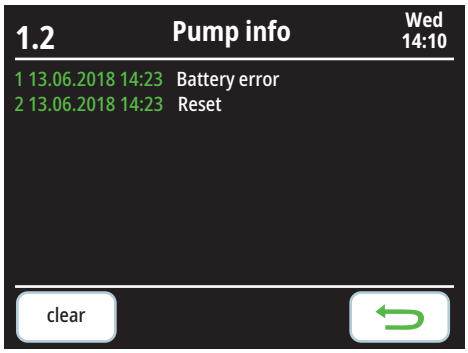

Fig. 23: Examples from the Info menu:

10.3 Mode menu

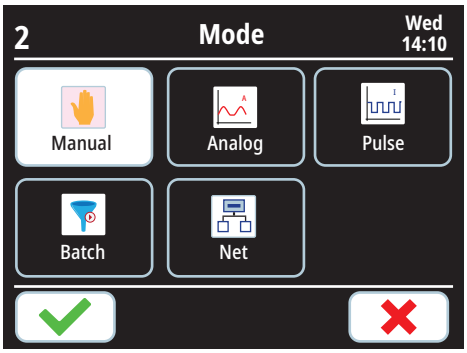

Fig. 24: Mode menu

Depending on the device model, you can choose from the following operating modes:

Mode	Description	Model
Manual	In manual mode, the delivery rate is set manually. The desired delivery rate of the dosing pump can be set using the delivery rate setting buttons.	LDX/LAX/LPX
Analog	Enables control of the delivery rate via a 0/4 – 20 mA signal.	LAX/LPX
Pulse	The pulse input enables control of the stroke frequency and the number of strokes depending on the number of pulses and the pulse spacing.	LDX/LPX
Batch	Control of the flow rate via manual start, an external pulse, at intervals or at set times.	LPX
Net	Enables the dosing pump to be controlled via Modbus commands that are transmitted via the BUS input.	LPX

Table 13: Mode

10.3.1 Operating mode settings

Manual

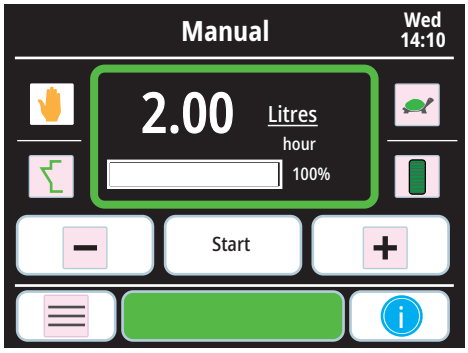

Fig. 25: Manual operating mode

Using the flow rate setting buttons (+/-), you can vary the desired flow rate of the dosing pump. To increase or decrease the flow rate, press the + or -button. Use the Start and Stop buttons to control pump operation.

Analog

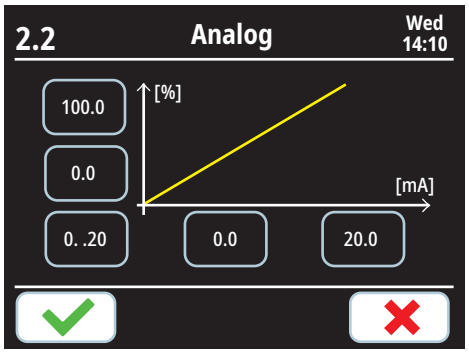

Fig. 26: Analogue operating mode

The operating mode *Analogue* allows the delivery rate to be controlled via a current signal. The diagram shows the percentage value [%] of the delivery rate depending on the current signal [I]. On the one hand, you can switch between the setting 0 – 20 mA or with cable break function 4 – 20 mA. On the other hand, you can adjust the setting ranges of the analogue signal.

You can assign values between 0% and 100% to the percentage factor. This means that you can assign the maximum and minimum percentage value to a specific maximum or minimum value of the analogue signal. The limits of the analogue signal can assume any value between 0 mA and 20 mA. For example, with the corresponding setting, 100 % of the delivery rate can already be achieved with a 10 mA current signal. 0 – 20 mA control is the default setting.

You can evaluate the analogue signal in external switchgear for control or measurement purposes.

Pulse

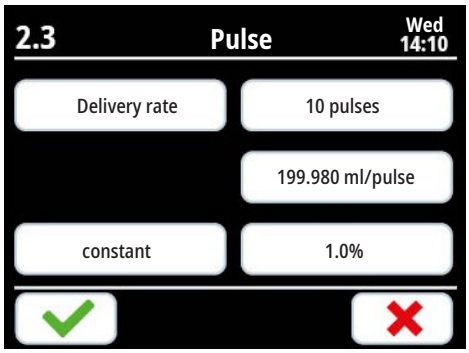

Fig. 27: Pulse operating mode

Using the pulse input, you can control the delivery rate by means of pulses. There are different variants for the setting. With the Dynamic and Water Meter settings, the delivery capacity is calculated based on the pulse sequence. In other words, the delivery capacity is controlled by the number of dosing pump strokes, which depends on the number of pulses and the interval between pulses. The Constant setting, on the other hand, allows the delivery rate of the dosing pumpt to be set via a fixed value.

- Flow rate: Delivery of a fixed output per pulse
- Pulse memory: All the strokes still to be executed are stored in the pulse memory.
- ml/pulse: Enter the desired millilitres per pulse.
- %: Enter the delivery capacity (delivery speed) at which the dosing pump should convey fluid.

INFORMATION

Contradictory parameter inputs result in the dosing pump's stroke buffer filling up, preventing any additional strokes from being stored.

Water meter

The Water meter pulse input mode offers the following configuration options:

- Max: maximum expected water delivery rate.
- Capacity: Specifies the water meter's throughflow amount per pulse in l.
- Units:
  - %: Enter the desired concentration in per cent
  - ml/m³: Enter the desired millilitres per cubic metre of water
  - ppm: Enter the desired concentration in per mille
- Concentration: Specify the concentration of the solution being dosed into the water.

On the basis of the water meter's values (l/pulse) and the delivered dosing capacity (output) , the dosing pump automatically determines the stroke frequency. If the dosing pump's maximum delivery rate is exceeded during a fast sequence of pulses, any further pulses are ignored.

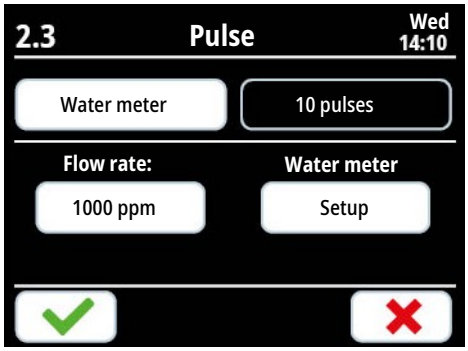

Fig. 28: Pulse water meter

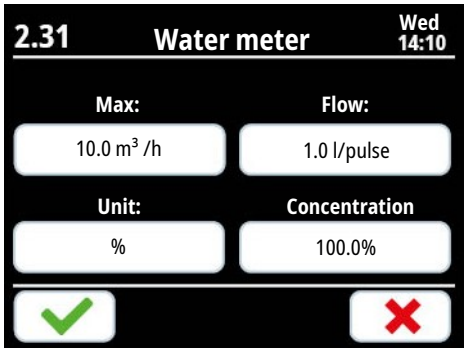

Fig. 29: Water meter setup

Batch

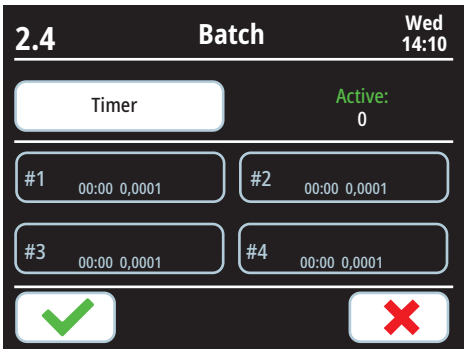

Fig. 30: Batch operating mode

In *Batch* operating mode, the system regulates the dosing pump's stroke frequency and the number of strokes based on the delivered output. You can set the flow rate individually based on the run time, number of strokes and delivery capacity (stroke frequency) of the dosing pump. This allows dosing at intervals or at fixed times during the course of a week. The following types are available:

- Manual: Dosing is started manually via start/stop.
- External: Dosing is started externally.
- Interval: Dosing is started automatically at regular intervals.
- Timer: Dosing is started at specific times.

Net

In *Net* operating mode, you control the dosing pump using a higher-level controller via Modbus commands. Press the *ID* field, to enter the Modbus address. Using the adjacent field, you can switch between the following:

- *Blocked*: The dosing pump has been stopped.
- *Ready*: The dosing pump applies the setpoint from the BUS input.

NOTE! The timeout is set to 15 seconds.

10.4 Service menu

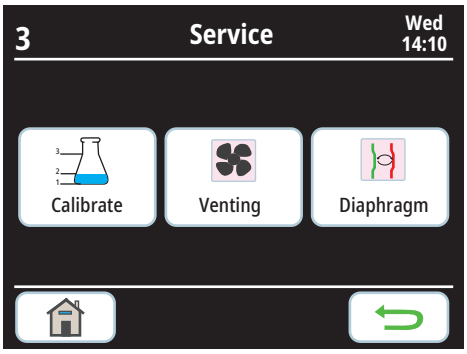

Fig. 31: Service menu

The following functions are available:

- Calibration: You can use this function to calibrate the dosing pump. In dependence on the dosing medium you are using and the existing delivery pressure, you must match the theoretical delivery capacity with that which is actually measured. The MEMDOS SMART always calibrates in manual mode. If the dos-

ing pump is operating in another mode, set the operating point in manual mode to match the other mode to ensure accurate calibration.

- Venting: The diaphragm moves back and forth quickly, making it easier to remove the air in the dosing head.
- Diaphragm: The diaphragm moves to the front dead centre for easy diaphragm replacement.

10.5 Setup menu

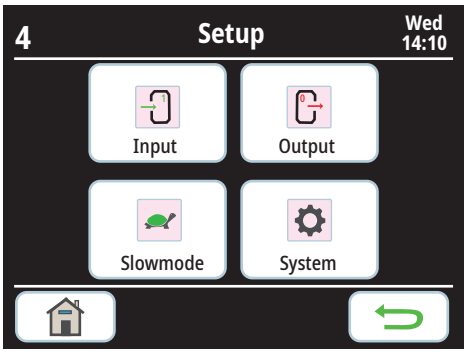

Fig. 32: Setup menu

- Input: Setting the input signals
- Output: Setting the output signals
- Slowmode: Slow suction
- System: System settings

10.5.1 Inputs

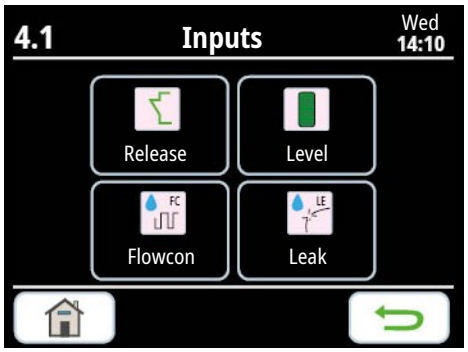

Fig. 33: Inputs

- Release: Using the release input, it is possible to start or stop the dosing pump externally.
- Level: Fill level monitoring of the dosing medium to prevent the container from being sucked empty and thus refilling can be done in time
- Leak: A connection to a leak sensor in the flange of the dosing head to monitor for a possible diaphragm rupture.
- Flowcon: For connecting a FLOWCON flow sensor.

10.5.2 Outputs

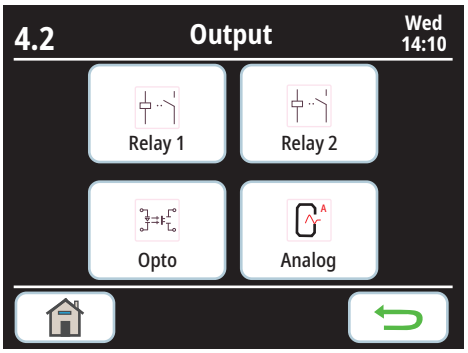

Fig. 34: Outputs

- Relay 1: Using the relay 1, it is possible to forward outwards disturbances on the dosing pump.
- Relay 2: Using the relay 2, it is possible to forward outwards disturbances on the dosing pump.
- Opto: Optocoupler output for transmitting a signal between galvanically isolated circuits.
- Analog: The analogue output makes it possible to output the configured delivery capacity by means of a 0/4 – 20 mA signal or forward the analogue signal to another pump, either directly, scaled or as a fixed value.

10.5.2.1 Analogue output

In the Analog menu, press the Off button to select the desired mode:

- Forward: The analogue input signal or the manually configured value is forwarded directly to the analogue output. This option allows you to connect several pumps in series and have them all run identically.

  For example:

  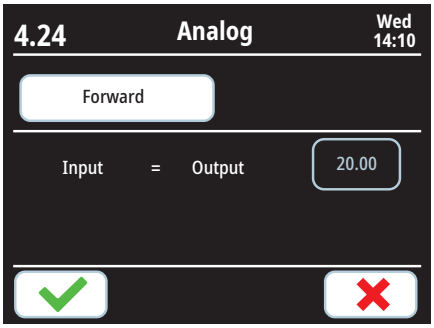

- Scale: The analogue input signal or the manually configured value is changed based on the specified factor and output via the analogue output. This option allows you to connect two pumps in series and run the second pump proportionally to the first pump, without having to use a second external analogue signal or an additional controller.

  For example: The analogue input of pump 1 is 20 mA and the analogue input of pump 2 should be 50% of pump 1.

You set the scale as follows:

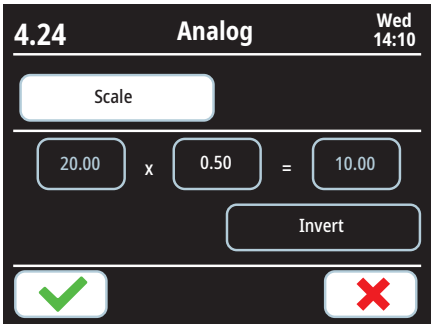

- Fixed value: The fixed value specified in the first box is used as the analogue output signal.

For example:

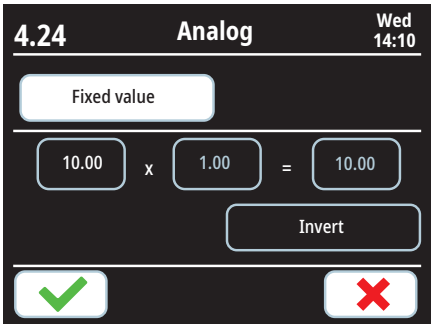

10.5.3 Slowmode

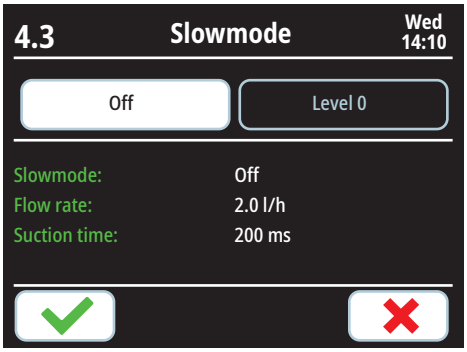

Fig. 35: Slowmode

In slow mode, you can choose between four different suction speeds for gentle dosing of viscous media.

You can choose from the following options:

- Off (factory default setting)
- Slow Motion 1 (75 % of the standard suction speed)
- Slow Motion 2 (50 % of the standard suction speed)
- Slow Motion 3 (25 % of the standard suction speed)

10.5.4 System

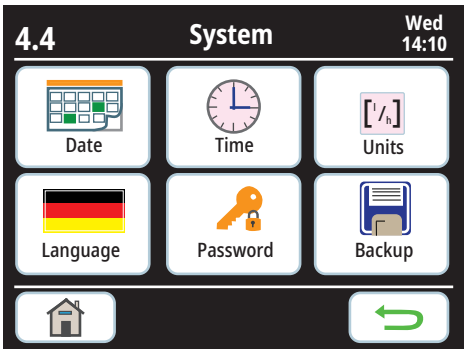

Fig. 36: System settings

- Date: Enter the current date.
- Time: Enter the current time.
- Units: Select the units of measurement to be displayed. The following units are available:
  - Litres per hour
  - Litres per day
  - Millilitres per minute
  - US gallons per hour
  - US gallons per day
  - Imperial gallon per hour
  - Imperial gallon per day
- Language: Set the menu language displayed. The following languages are available:
  - German
  - English
  - French
  - Italian
  - Dutch
  - Polish
  - Portuguese
- Password: Here you can set a release code from 0001 to 9999 as required. If the release code is activated, operation of the dosing pump is blocked. You can only perform settings after entry of the correct release code. The following items can be password-protected:
  - Info menu
  - Mode
  - Service
  - Start and Stop
  - Setup
  - All

After password protection is activated and you return to the Start menu, the display remains operable for the next 3 minutes (lock open) and is then locked (lock closed).

Entering the password

- Once you press any button (or the locked menu), you must enter the password. If you enter the code correctly, you have 180 seconds in which to operate the dosing pump. The password must be re-entered after the end of the 180 seconds, even if this runs out during entry.

INFORMATION

The factory setting before the first change of the password is: 1234.

Info messages

The dosing pump stores various pump messages with date and time stamps so they can be retrieved later. The following messages are displayed:

- Reset
- Release withdrawn
- Leak
- Cable break
- Flowcon

Backup

Here you can reset the dosing pump to factory settings. The calibration settings, operating mode, and the input and outputs are reset. With the MEMDOS SMART LPX variant, it is also possible to save the current pump settings or load previously saved settings.

11 Operation

WARNING

Caustic burns or other burns through dosing media!

After connecting the mains supply, residual dosing media in the dosing head can spray out.

- ▶ Before connecting the mains supply, connect the dosing lines.
- ▶ Check that all the screw connections have been tightened correctly and are leak-proof.

CAUTION

Danger of automatic start up!

The dosing pump does not have an ON/OFF switch and may start to pump as soon as it is connected to the mains supply. This means that dosing medium can escape. Depending on the type and hazardousness of the dosing medium, this can result in injury.

- ▶ Stop the dosing pump before disconnecting it from the mains supply.
- ▶ Ensure that the dosing pump has been installed correctly before connecting it to the mains supply.

11.1 Commissioning the dosing pump

- ✓ The dosing pump has been properly mounted and installed (→ Wall mounting [▸ 19], Hydraulic installation [▸ 20] and Electrical installation [▸ 25]).
- ✓ All the mechanical fastenings have been inspected to ensure adequate load-bearing capacity.
- ✓ The dosing head screws have been tightened with the correct torque.
- ✓ All the hydraulic sections have been inspected to ensure they are adequately leak-proof and that the through flow direction is correct.
- ✓ The dosing pump has been properly configured (→ Main menu [▸ 29]).

INFORMATION

For initial commissioning, it is advisable to use water as the dosing medium to check that the system is leak-proof and that the dosing pump is functioning correctly. Undesirable reactions may occur between the actual dosing medium and water. Check first whether undesirable reactions could occur between the actual dosing medium and the water.

1. Open the shut-off valves on the suction and discharge sides if present.
2. Plug in the dosing pump's mains plug to the power supply.
3. If the dosing head is fitted with a vent screw, vent the dosing pump (→ Venting the dosing pump [▸ 36]).
4. Calibrate the dosing pump (→ Calibrating the dosing pump [▸ 37]).
5. Select an operating mode and start the dosing pump in accordance with the instructions in section → Operating modes [▸ 37].
6. The dosing pump primes. If it does not prime enough, use a priming aid (→ Priming aid [▸ 24]).

INFORMATION

At initial commissioning, it is advisable to prime the pump without backpressure. For this purpose, we recommend installing a relief valve on the discharge side of the dosing pump.

⚐ The dosing pump is commissioned.

11.1.1 Venting the dosing pump

Size 2, 5 and 10 plastic dosing heads are fitted with a vent screw. Gas bubbles can be removed from the dosing head using vent screws, in order to improve the performance of the pump. Whether venting is helpful depends on the dosing medium and the size of the pump.

CAUTION

Danger of personal injury and material damage!

Dosing medium can escape if you loosen connections on the dosing head, e.g. for venting, during operation.

- ▶ Use sufficient personal protective equipment.
- ▶ Follow the safety data sheet of the dosing medium.
- ▶ Clean the dosing pump if dosing medium escapes.
- ▶ Dispose of the dosing medium correctly.

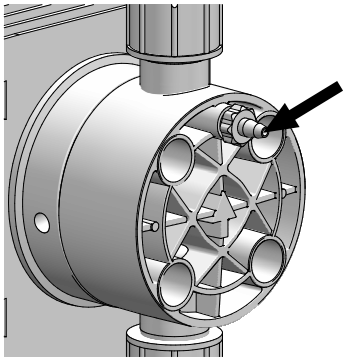

Fig. 37: Dosing head ventilation with venting screw

- ✓ The dosing head ventilation has been connected (→ Connecting dosing head ventilation [▸ 22]).

1. Open the vent screw by one complete turn (looking onto the dosing head, anti-clockwise).
2. Go into the Main menu.
3. Select the menu item Service and press Vent.
4. Press on the ventilation symbol and hold the button down.

↳ The dosing pump starts delivery at the highest stroke frequency.

5. Release the ventilation symbol as soon as there is a continuous flow from the dosing head ventilation with no air bubbles.

   ↳ The dosing pump stops delivery.

6. Close the vent screw.

⚐ The dosing pump is vented.

INFORMATION

If you are using strongly effervescent dosing media, allow them to flow out continuously. Open the vent screw such that about one drop per 1 – 3 strokes escapes, then close the discharge.

11.1.2 Calibrating the dosing pump

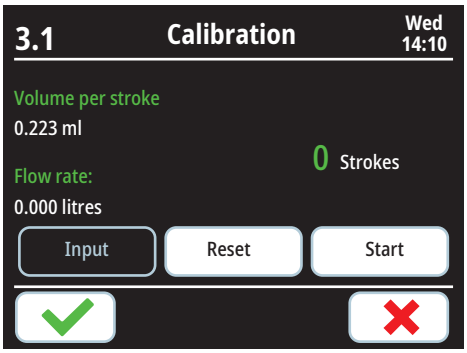

Fig. 38: Calibrating the dosing pump

In dependence on the dosing medium you are using and the existing delivery pressure, you must match the theoretical delivery capacity with that which is actually measured.

The MEMDOS SMART always calibrates in manual mode. If the dosing pump is operating in another mode, set the operating point in manual mode to match the other mode to ensure accurate calibration. If the dosing pump is set to 0.0% delivery capacity in manual mode, it cannot be calibrated, because calibration is performed using the last manually saved delivery capacity.

✓ The plant sections on the discharge side of the dosing pump have been installed correctly and are ready for operation.

1. Fill the metering container with the dosing medium.
2. Hold the end of the dosing pump's suction line in the metering container.
3. Vent the dosing pump.
4. Press Menu.
5. Press Service and then Calibration.
6. Press Start. The dosing pump starts delivery and displays the number of executed strokes.
7. Press Stop as soon as you have achieved a measurable value in the metering container. The dosing pump stops and displays the theoretical value of the delivery rate in ml.
8. Enter the delivered volume using the Input function. The value is transmitted to the pump.

⚐ The dosing pump is calibrated.

You can use the Reset function to reset the entries to the factory settings.

11.2 Operating modes

The dosing pump offers the following operating modes:

- Manual: Manual setting of the delivery capacity.
- Pulse: Controlling the stroke frequency and number of strokes in dependence on the number of pulses and the pulse spacing.
- Analog: Controlling the delivery capacity by means of a 0/4 – 20 mA signal.
- Batch: Controlling the delivery output via manual start, an external pulse or intervals.
- Net: Controlling the dosing pump via Modbus commands.

11.2.1 Manual (manual operation)

11.2.1.1 Selecting the operating mode

1. Press Menu on the start screen.
2. In the main menu, choose Mode.
3. In the Mode menu, choose Manual .
4. Confirm the selection by pressing the √.

   ↳ You return to the main menu and the start screen shows the symbol of the *Manual* operating mode.

⚐ *Manual* operating mode is set.

11.2.1.2 Starting the dosing pump

1. On the start screen, press Start.

   ↳ The dosing pumps starts dosing immediately. The current delivery rate is automatically shown on the screen.

2. Use + and - to set the desired stroke frequency and thus increase or decrease the delivery rate.

⚐ Dosing pump has started.

11.2.1.3 Stopping the dosing pump

▶ Press Stop on the start screen.

⚐ Dosing pump has stopped.

INFORMATION

Pressing Menu does not interrupt dosing!

You do not stop the dosing pump until you change to a different operating mode using the menu.

11.2.2 Pulse

In the *Pulse* operating mode, you regulate the stroke frequency and the number of strokes based on the number of pulses and the pulse spacing of the pulse signal applied at the pulse input (→ Connection socket 2 [▶ 26]).

11.2.2.1 Selecting the operating mode

1. Press Menu on the start screen.
2. In the main menu, choose Mode.
3. In the Mode menu, choose Pulse.
   ↳ The dosing pump displays the current configuration of this operating mode's parameters, for example:

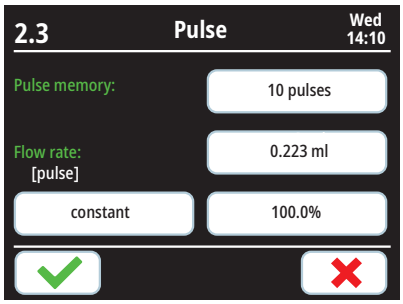

4. Confirm the selection by pressing the √.
   ↳ You return to the main menu and the start display shows a symbol of the *Pulse* operating mode.

⚐ *Pulse* operating mode set.

11.2.2.2 Selecting the pulse type

In pulse mode, there are two different variants for setting. The *Dynamic* setting calculates the delivery rate based on the pulse sequence, i.e. if the pulse sequence increases, the delivery rate increases at the same time. The *Constant* setting allows the delivery rate of the dosing pumpt to be set via a fixed value.

1. Press Menu on the start screen.
2. In the Mode menu, choose Pulse.
   ↳ The dosing pump displays the current configuration of this operating mode's parameters.
3. Select a pulse (Dynamic, Constant or Water meter)
4. Enter the value of the desired delivery rate.
5. Confirm the entry by pressing the √.

⚐ Pulse type selected and configured.

11.2.2.3 Starting the dosing pump

✓ The dosing pump has been connected correctly (→ Connection socket 2 [▶ 26], Pulse input).

1. Press Start.
2. Supply a pulse to the pulse input of the dosing pump.
   ↳ The dosing pumps starts dosing immediately. The system automatically calculates the resulting delivery capacity and displays it.

⚐ Dosing pump has started.

11.2.2.4 Stopping the dosing pump

▶ Press Stop.

⚐ Dosing pump has stopped.

11.2.3 Analogue

In the *Analogue* mode, an external 0/4 – 20 mA signal at the analogue input controls the stroke frequency (→ Connection socket 2 [▶ 26]).

11.2.3.1 Selecting the operating mode

1. Press Menu on the start screen.
2. In the main menu, choose Mode.
3. In the Mode menu, choose Analog.
   ↳ The dosing pump displays the current configuration of this operating mode's parameters, for example:

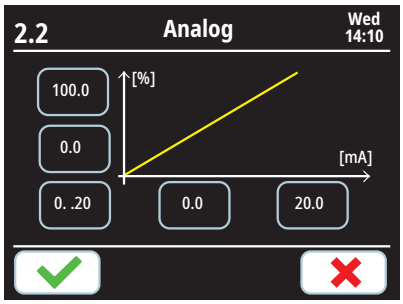

4. Confirm the entry by pressing the √.
   ↳ You return to the main menu and the dosing pump displays the *Analogue* symbol on the start screen.

⚐ *Analogue* operating mode set.

11.2.3.2 Setting the signal mode

You have the option of setting a 0 – 20 mA or 4 – 20 mA signal.

With the cable break function, you have the option of setting a 0 - 20 mA or a 4 - 20 mA signal.

1. Press Menu on the start screen.
2. In the Mode menu, choose Analog.
3. By pressing the 0..20 button, you can switch between the two signal types.
4. Confirm your entry with √.

⚐ The signal mode is set.

11.2.3.3 Setting the current values

1. Press Menu on the start screen.
2. In the Mode menu, choose Analog.
   ↳ The dosing pump displays the current configuration of this operating mode's parameters.
3. Set the desired current values and flow rates. A value in the range of 0.00 - 20.00 mA is permissible for the current value and a value of 0 - 100 % for the delivery rate.
4. Confirm your entry with √.

⚐ Current values for delivery rates are set.

11.2.3.4 Starting the dosing pump

✓ The dosing pump has been connected correctly (→ Connection socket 2 [▶ 26], Analogue input).

1. Press Start.
2. Route a 0 - 20 mA or a 4 - 20 mA signal to the analogue input of the dosing pump.
   ↳ The dosing pumps starts dosing immediately. The system automatically calculates the resulting delivery capacity and displays it.

⚐ Dosing pump has started.

11.2.3.5 Stopping the dosing pump

▶ Press Stop or reduce the incoming signal to the value for *0% current* or less.

INFORMATION

If the signal value is below 2.5 mA for a 4 – 20 mA signal, the error message *cable breakage* appears in the information field.

⚐ Dosing pump has stopped.

11.2.4 Batch

The *Batch* operating mode is batch dosing in which the stroke frequency and the number of strokes of the dosing pump are controlled based on the required flow rate.

11.2.4.1 Batch operation type

You can choose from the following mode types in *Batch* mode:

- Manual
- External
- Interval
- Timer

Manual / External

Batch mode types *Manual* and *External* are configured in the same way butdiffer only in the way in which that the dosing pump is started. They offer the following configuration options:

- *Flow rate*: Defines the required delivery rate of the dosing pump, specified in litres. The display shows the calculated running time.
- *Delivery capacity*: Specifies the required stroke frequency stated as a percentage of the maximum stroke frequency.

Interval

The *Interval* batch mode type offers the following configuration options:

- *Interval period*: Specifies the interval at which the set delivery rate (batch) is to occur.
- *Flow rate*: Defines the required delivery rate of the dosing pump, specified in litres. The display shows the calculated running time.
- *Delivery capacity*: Specifies the required stroke frequency stated as a percentage of the maximum stroke frequency.

Timer

With the *Timer* batch mode type, you can programme four different dosing operations over a period of one week.

You can schedule dosing operations for each weekday to start at a specified time. The following parameters can be configured for timers 1 to 4:

- *On/Off*: Dosing operation present or not
- *Time*: Specifies the start time and day of the week.
- *Flow rate*: Sets the quantity that the pump is to deliver.
- *Delivery capacity*: Specifies the stroke frequency of the dosing pump.

11.2.4.2 Selecting the operating mode

1. Press Menu on the start screen.
2. In the main menu, choose Mode.
3. In the Mode menu, choose Batch.
   ↳ The dosing pump displays the current configuration of this operating mode's parameters.
4. Confirm your entry with √.
   ↳ You return to the main menu and the dosing pump displays the *Batch* symbol on the start screen.

⚐ *Batch* operating mode set.

11.2.4.3 Programming dosing operations

1. Press Menu on the start screen.
2. In the Mode menu, choose Batch.
3. First select Timer.
4. Select one of the four timers to configure.
5. First specify with On or Off whether the dosing operation should exist.
6. If a dosing operation exists, enter the days of the week and the start time for the dosing operation.
7. Set the delivery rate and the delivery capacity.
8. You can set additional timers as required.
9. Confirm the complete selection by pressing the √ or cancel the entries with X.

⚐ Dosing procedures programmed.

11.2.4.4 Starting the dosing pump

Batch mode type = *Manual*

1. Press Start on the start screen.
2. Press Start again.

↳ The dosing pumps starts dosing immediately. The system automatically displays the resulting delivery capacity.

⚐ Dosing pump has started.

Batch mode type = *External*

1. Press Start on the start screen.
2. Supply a pulse to the pulse input of the dosing pump.
   ↳ The dosing pumps starts dosing immediately. The system displays the resulting delivery capacity.

⚐ Dosing pump has started.

Batch mode type = *Timer*

▶ Press Start on the start screen.

↳ The dosing pump starts dosing when one of the set days of the week and one of the set start times are reached.

⚐ Dosing pump has started.

11.2.4.5 Stopping the dosing pump

▶ Press Stop.

⚐ Dosing pump has stopped.

11.2.5 Net

This operating mode enables the dosing pump to be controlled via Modbus commands that are transmitted via the BUS input (LPX only). The dosing pump can be controlled via a superordinate control system.

If you select the *Net* operating mode, you can enter the Modbus address in the main view and switch between *Blocked* and *Ready*.

11.3 Setting external On/Off via release input

Regardless of the selected operating mode, you can start or stop the dosing pump by means of the closed switching contact on the Release input. If you set the function, the system displays in the selected operating mode the symbol for configuration of the release input.

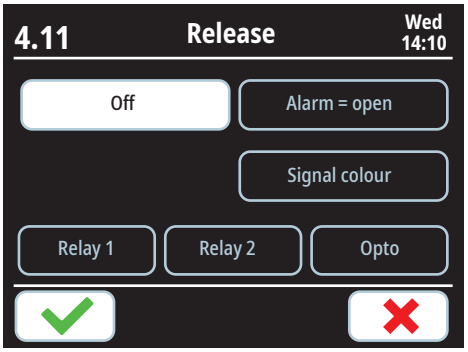

Fig. 39: Release settings

The release enables the dosing pump to be started or stopped externally (→ Connection socket 1 [▶ 26]). You can choose from the following options:

- *Not active* (factory default setting)
- *Alarm = Contact* (releases dosing pump when contact is closed)
- *Alarm = Open* (releases dosing pump when contact is open)

1. Press Menu on the start screen.
2. In the main menu, select Setup.
3. In the Setup menu, choose Input and then Release.
   ↳ The configuration of the release input is displayed.
4. Activate the release input via Off/On and specify with Alarm = Open whether the contacts are opened or closed. By selecting the individual relays or optocouplers, you can define which ones are switched. Furthermore, you can assign different signal colours to the release.
5. Confirm the selection by pressing the √.

⚐ Release set.

INFORMATION

The system displays the selected setting of the release input as an icon on the start screen of each operating mode.

11.4 Configuring the leak settings

If a diaphragm ruptures, the dosing medium starts to leak. This leakage is drained via the leakage opening. On the flange of the dosing head, there are three openings for this purpose. By connecting a leakage probe (LJ accessory), a switching signal can be routed to the outside.

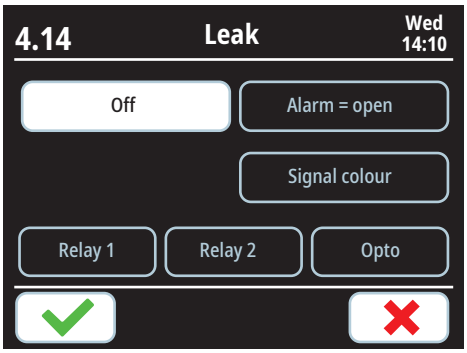

Fig. 40: Leak settings

1. Press Menu on the start screen.
2. In the main menu, select Setup.
3. In the Setup menu, choose Input and then Leak.
4. Activate the leakage via Off/on and define with Alarm = Open whether the contact is opened or closed. By selecting the individual relays or optocouplers, you can specify which ones are switched. Furthermore, you can assign different signal colours to the leakage.
5. Confirm the selection by pressing the √ or return with X.

⚐ Leak settings configured.

11.5 Configuring the outputs

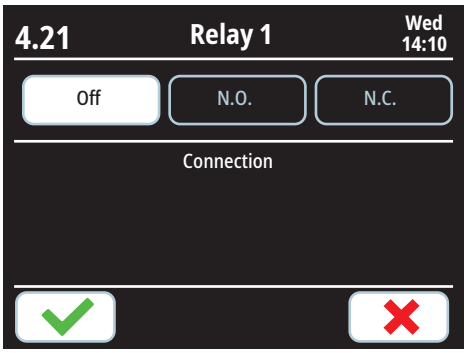

Fig. 41: Relay settings

Using the outputs, you can report faults in the dosing pump externally. This can be performed using the relay or the optocoupler. The optocoupler also has the function for stroke feedback.

Information about the connections can be found under "Alarm relay output" → Connection sockets 4 and 5 (LPX only) [▶ 27] and "Fault-reporting optocoupler" → Connection socket 1 [▶ 26].

1. Press Menu on the start screen.
2. In the main menu, select Setup.
3. In the Setup menu, choose Output.
   ↳ The dosing pump displays relays and an optocoupler for selection.
4. Select a relay or the optocoupler.
5. Activate the relay or the optocoupler via Off/On.
6. Relay selection: Specify whether the relay is to be a normally open contact with N.O. or a normally closed contact with N.C.. Optocoupler selection: Specify whether the optocoupler is to be a normally open contact with N.O. or a normally closed contact with N.C. or whether the optocoupler is to be for stroke feedback.
7. Confirm the selection by pressing the √ or return with X.

⚐ Outputs set.

11.6 Configuring level monitoring

Level monitoring of suction-side feeding of the dosing medium to prevent the tank being sucked dry and to ensure that it can be topped up again in good time. For this purpose, the level monitoring has two alarm levels: Alert and main alarm For information about the connection for level monitoring, see "Level input" → Connection socket 3 [▶ 27].

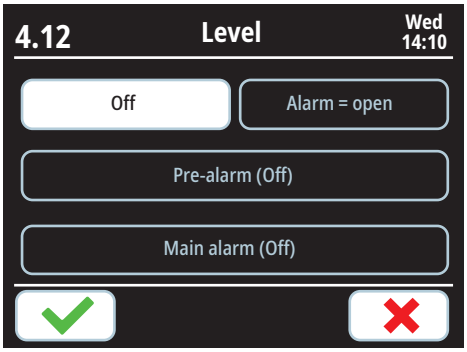

Fig. 42: Configuration options for level monitoring

1. Press Menu on the start screen.
2. In the main menu, select Setup.
3. In the Setup menu, choose Input and then Level.
4. The dosing pump shows the level monitoring settings.
5. Activate this via Off/On and specify with Alarm = Open whether the contact is opened or closed.
6. Activate or deactivate the pre-alarm or main alarm as required.
7. Confirm the selection by pressing the √.

⚐ Level monitoring configured.

Status	Display screen	Level input		Dosing pump
		Alarm = contact	Alarm = open	
Tank filled		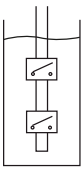	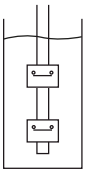	running
Tank Minimum (Pre-alarm)		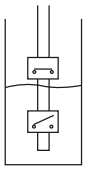	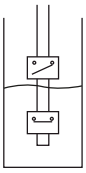	running
Tank empty (Main alarm)		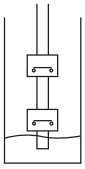	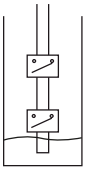	stopped

Table 14: Configuration of the level input

11.7 Activating the password protection

If the password is activated, operation of the dosing pump is blocked for some or all areas. As soon as a key is pressed for a blocked area, the password must be entered. If you enter the code correctly, you have 5 minutes in which to operate the dosing pump. When the 5 minutes have elapsed, you must re-enter the code, even if you are in the middle of making another entry (this does not include settings in the menus).

You can only perform settings after entry of the correct password. You can set any password you like from 0000 to 9999. In the factory setting, the password is 1234.

WARNING

Caustic burns or other burns through dosing media!

If the password protection is activated, operation of the dosing pump is blocked. The only way to stop a dosing pump without entry of the password is via the power supply. In unfavourable cases, if the password protection has been inadvertently activated or the user has forgotten the password, the dosing pump cannot be stopped in time. This can result in injury.

▶ Install an emergency stop switch or integrate the dosing pump into the plant safety concept.

1. Press Menu on the start screen.
2. In the main menu, select Setup.
3. In the Setup menu, choose System.
4. Enter the password 1234 when setting for the first time.
   ↳ The dosing pump displays the configuration of the password protection.
5. In this menu, activate the password protection with Off/On and change the password with Change if necessary. Furthermore, you can configure whether individual areas of the pump are to be locked or all setting options.
6. Confirm the selection by pressing the √.

⚐ Password protection activated.

12 Maintenance

Products from Lutz-Jesco GmbH are manufactured to the highest quality standards and have a long service life. However, some parts are subject to operational wear.

This means that regular inspections are necessary to ensure a long operating life of the product. Regular maintenance protects the product against operational disruptions.

DANGER

Mortal danger from electric shock!

Live parts can inflict fatal injuries.

- ▶ Before carrying out any maintenance work, always disconnect the device from the power supply.
- ▶ Secure the system to prevent it from being switched on by accident.

WARNING

Caustic burns or other burns through dosing media!

While working on the dosing head, valves and connections, you may come into contact with dosing media.

- ▶ Use sufficient personal protective equipment.
- ▶ Rinse the dosing pump with a medium (e.g. water) which does not pose any risk.
- ▶ Release pressure in hydraulic parts.
- ▶ Never look into open ends of plugged pipelines and valves.

WARNING

Caustic burns or other burns through dosing media!

After the mains supply has been connected, residual dosing media in the dosing head can spray out.

- ▶ Before connecting the mains supply, connect the dosing lines.
- ▶ Check that all the screw connections have been tightened correctly and are leak-proof.

CAUTION

Danger of personal injury and material damage!

The dosing pump can generate a pressure that is many times the rated one. The dosing medium can escape in the case of material failure or wear on the dosing head, the connection pipe or the seals that are used.

- ▶ Carry out maintenance work at the recommended intervals.

12.1 Maintenance intervals

This table gives you an overview of maintenance work and the intervals at which you must carry it out. The next few sections contain instructions for carrying out this work.

Maintenance work to be carried out	Frequency
Check that piping is seated firmly	Regularly
Check that suction and pressure valves are seated firmly	Regularly
Clean suction and pressure valves	Regularly
Check that electrical connections are not damaged	Regularly
Tighten up dosing head bolts	• Regularly • Before initial commissioning • After each diaphragm change
Check diaphragm for leakage due to rupture	Regularly (as long as no leak monitoring system is installed)
Check that the installed accessories are functioning correctly	Regularly
Check the dosing pump for unusual noises during operation, unusual temperatures or smells	Regularly
Replace parts that are subject to wear (diaphragms, valves, seals, etc.)	When unacceptable levels of wear are detected
Rinse out and clean the dosing pump	• Before changing diaphragms • Before long-term decommissioning • After feeding aggressive, sticky, crystallising or contaminated liquids

Table 15: Maintenance information and maintenance intervals

12.2 Tighten up dosing head bolts

- ▶ Tighten the dosing head bolts in diagonally opposite sequence with a torque wrench. The necessary torque is 180 Ncm.

⚐ Dosing head screws tightened.

12.3 Diaphragm replacement

The dosing pump has automatic diaphragm change program which simplifies replacing diaphragms.

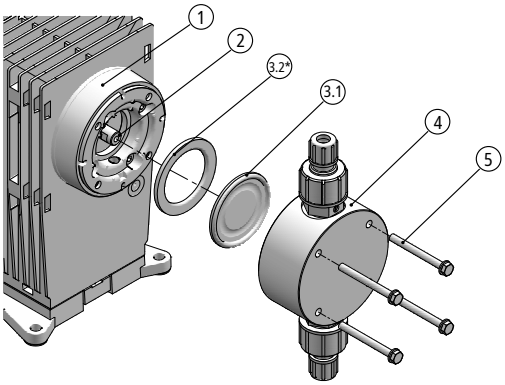

Fig. 43: Exploded view of the diaphragm and dosing head

* only for sizes 20 and 30

12.3.1 Removing the old diaphragm

✓ You have disconnected the dosing pump from the mains supply.

✓ You have depressurised the hydraulic sections of the plant.

✓ You have rinsed the dosing pump using a safe medium (e.g. water).

1. Remove the four screws (5) on the dosing head using a suitable tool (SW 3 Allen key) and take off the dosing head (4).
2. Press Menu.
3. Press Service and then Maintenance.
4. Press Start.
   ↳ The diaphragm travels to the front end position. The message *Please wait!* is displayed.
5. Wait until the message *Change!* is displayed.
6. Use pliers to bend the edge of the diaphragm (3) slightly upwards and screw it out counter-clockwise.

⚐ Old diaphragm removed.

12.3.2 Installing a new diaphragm

NOTE

Damage to the dosing head/diaphragm leaks

If you tighten the screws too much, this can lead to the dosing head being damaged. However, not tightening the screws enough leads to the diaphragm being leaky and correct functioning being affected.

▶ Tighten the screws to a torque of 180 Ncm.

✓ You have thoroughly cleaned the diaphragm rod (2) and the diaphragm flange (1) so that the new diaphragm is not affected by dosing medium residues.

✓ The diaphragm (3) thread was lightly greased (e.g. Molycote Longterm W2).

1. Screw the diaphragm manually in the clockwise direction until it safely contacts into the diaphragm rod.
2. Bring the dosing head into position and insert the screws. First tighten the screws finger-tight. After this, tighten the bolts on the diagonal, e.g. top left – bottom right – top right – bottom left.

⚐ New diaphragm installed.

INFORMATION

It may be necessary to gauge the delivery capacity after replacing the diaphragm or other dosing pump spare parts.

12.4 Cleaning the suction and pressure valve

Contaminated valves affect the dosing preceision and this means that you should clean the valves on a regular basis.

With dosing heads made of plastic, when replacing a valve you must replace the complete dosing head.

13 Troubleshooting

The following subsections provide information about how to rectify faults on the device or the system. If you cannot eliminate the fault, please consult with the manufacturer on further measures or return the dosing pump for repair.

13.1 Dosing pump not delivering or output too low

Possible Cause	Corrective actions
Wrong type of dosing pump selected	Check the dosing pump's technical data and if necessary select a type with a higher delivery capacity.
Valve leaking or blocked	Clean the valve and vent the dosing pump. Tighten the screw connections.
Valve installed incorrectly	Reassemble the valve. Make sure that the valve balls are above the valve seats.
Valve damaged (e.g. valve balls)	Remove the damaged parts or install a new valve.
Suction line is leaking	Seal the leak locations or replace the parts.
Suction line is blocked (e.g. screen in foot valve)	Clean the suction line.
Shut-off valves closed	Open the shut-off valves. Check the dosing pump for possible damage.
Suction head too high	Set the dosing pump to feed or reduce the suction head. Install a priming aid.
Viscosity too high	Possibly reduce the concentration of the dosing medium or increase the temperature. Install spring-loaded valves. Increase the pipe diameter.
Power supply interrupted	Restore the power supply.
The dosing pump's electrical data does not match that of the mains supply	Check the electrical installation.
System backpressure too high (measured at discharge connection of dosing pump)	Clean blocked injection nozzle. Install pulsation dampeners to reduce pressure peaks if pipes are too long. Check function of safety valves.

Table 16: Dosing pump not delivering or output too low

13.2 Dosing pump does not prime

Possible Cause	Corrective actions
Valve leaking or blocked	Clean the valve and vent the dosing pump. Tighten the screw connections.
Valve installed incorrectly	Reassemble the valve. Make sure that the valve balls are above the valve seats.
Valve damaged (e.g. valve balls)	Remove the damaged parts or install a new valve.
Suction line is leaking	Seal the leak locations or replace the parts.
Suction line is blocked (e.g. screen in foot valve)	Clean the suction line.
Shut-off valves closed	Open the shut-off valves. Check the dosing pump for possible damage.
Suction head too high	Set the dosing pump to feed or reduce the suction head. Install a priming aid.
Viscosity too high	Possibly reduce the concentration of the dosing medium or increase the temperature. Install spring-loaded valves. Increase the pipe diameter.
Power supply interrupted	Restore the power supply.

Possible Cause	Corrective actions
Valves dry	Dampen the dosing head and the valves. Vent the dosing head.
Air in the suction line with simultaneous pressure on the pressure valve	Vent the dosing head or lines.

Table 17: Dosing pump does not prime

13.3 Delivery rate varies

Possible Cause	Corrective actions
Valve leaking or blocked	Clean the valve and vent the dosing pump. Tighten the screw connections.
Valve damaged (e.g. valve balls)	Remove the damaged parts or install a new valve.
Suction line is leaking	Seal the leak locations or replace the parts.
Suction line is blocked (e.g. screen in foot valve)	Clean the suction line.
Viscosity too high	Possibly reduce the concentration of the dosing medium or increase the temperature. Install spring-loaded valves. Increase the pipe diameter.
The dosing pump's electrical data does not match that of the mains supply	Check the electrical installation.
Suction side pressure too high (pump siphoning)	Install a back-pressure valve in the pressure line.
Pressure peaks due to acceleration with long suction lines	Install a suction pressure regulator.
Imprecise dosing due to changeable positive and negative suction heads.	Install a suction pressure regulator.
System backpressure too high (measured at discharge connection of dosing pump)	Clean blocked injection nozzle. Install pulsation dampeners to reduce pressure peaks if pipes are too long. Check function of safety valves.

Table 18: Delivery rate varies

13.4 No stroke movement observed

Possible cause	Corrective actions
Power supply interrupted	Restore the power supply.
The dosing pump's electrical data does not match that of the mains supply	Check the electrical installation.
Pressure peaks due to acceleration with long suction lines	Install a suction pressure regulator.
System backpressure too high (measured at discharge connection of dosing pump)	Clean blocked injection nozzle. Install pulsation dampeners to reduce pressure peaks if pipes are too long. Check function of safety valves.

Table 19: No stroke movement observed

13.5 Dosing pump delivery rate too high

Possible Cause	Corrective actions
Suction side pressure too high (pump siphoning)	Install the pressure maintenance valve in the pressure line.
Pressure peaks due to acceleration with long suction lines	Install a suction pressure regulator.

Table 20: Dosing pump delivery rate too high

13.6 Diaphragm is torn or tears too often

Possible Cause	Corrective actions
Shut-off valves closed	Open the shut-off valves. Check the dosing pump for possible damage.
Pressure peaks due to acceleration with long suction lines	Install a suction pressure regulator.
The materials are not suitable for the dosing medium being used	Check the resistance of the materials.
Diaphragm not screwed up to the end stop on the diaphragm rod	Screw a new diaphragm up to the end stop.
System backpressure too high (measured at discharge connection of dosing pump)	Clean blocked injection nozzle. Install pulsation dampeners to reduce pressure peaks if pipes are too long. Check function of safety valves.
Media sediment in dosing head	Clean the dosing head.

Table 21: Diaphragm is torn or tears too often

14 Shutdown and disposal

14.1 Decommissioning the dosing pump

1. Stop the dosing pump in accordance with the selected operating mode.
2. Unplug the dosing pump's mains plug from the power supply.
3. Disconnect all electrical connections.
4. Depressurize all the hydraulic parts in the system.
5. Unplug all the hydraulic connections on the dosing pump.
6. Empty the dosing head.
7. Remove any residual dosing medium from the dosing head by flushing the system with a washing agent. Ensure that the washing agent is compatible with the dosing medium.

⚐ Dosing pump is decommissioned.

14.2 Shutting down in an emergency

- In an emergency, you must immediately disconnect the dosing pump from the mains supply or activate the Emergency Stop switch installed in the system.
- Depending on the type of incident, you must depressurized the hydraulic connections or locked to prevent dosing medium from escaping.
- You must follow the safety data sheet of the dosing medium.

14.3 Disposal of old equipment

Observe the following instructions when disposing of an old device:

- Clean the device thoroughly. In the case of hazardous dosing media, you must also neutralise and decontaminate it.
- Dispose of dosing medium residue properly.
- You must dispose of the device in accordance with local laws and regulations. It should not be disposed of as domestic waste!

As the disposal regulations may differ from country to country, please consult your supplier if necessary.

In Germany, the manufacturer must provide free-of-charge disposal. However, this requires the device to have been safely returned along with a decontamination declaration.

15 Spare parts

15.1 Spare parts (size 1)

MEMDOS SMART LDX/LAX/LPX 2, 5, 10

Dosing head made of plastic

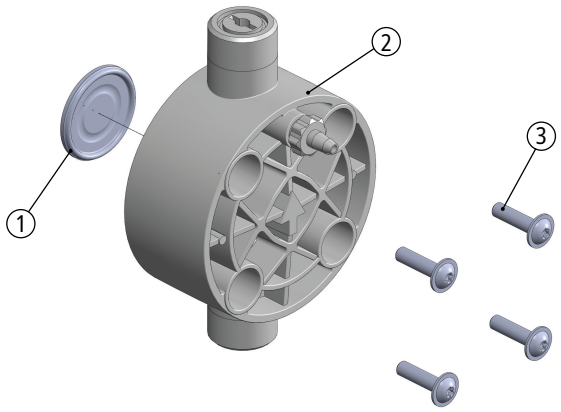

Dosing head made of stainless steel

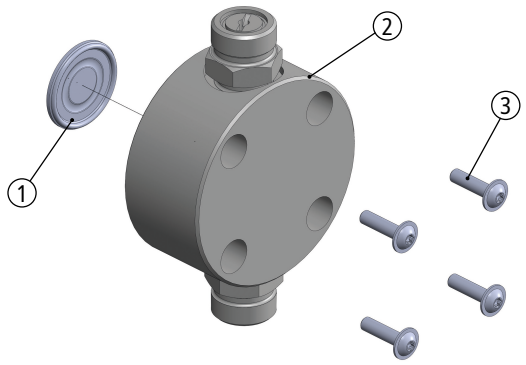

Fig. 44: Spare parts MEMDOS SMART LDX/LAX/LPX 2, 5, 10

1	Diaphragm	2	Dosing head
3	Dosing head screws		

MEMDOS SMART LDX/LAX/LPX 20, 30

Dosing head made of plastic or stainless steel

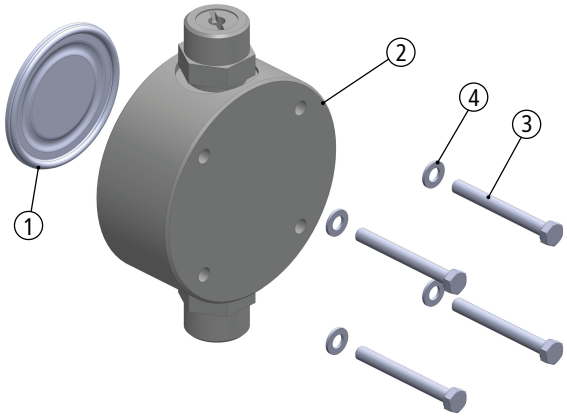

Fig. 45: Spare parts MEMDOS SMART LDX/LAX/LPX 20, 30

1	Diaphragm	2	Dosing head
3	Dosing head screws	4	Washers

15.1.1 Spare parts sets

Spare parts set: Diaphragm

Included spare parts	Size				
	2	5, 10		20, 30	
Diaphragm	x	x	x	x	x
Dosing head screws	x	x	x	x	x
Washers				x	x

Table 22: Spare parts set - Diaphragm

Spare parts set: Dosing head including valves

Spare parts set	Materials
PVC	Ceramic/PVDF/FPM (ball/seat/seals)
PP	
PVDF	PTFE/PVDF/FPM (ball/seat/seals)
Stainless steel (1.4571)	Stainless steel/stainless steel/FPM (ball/seat/seals)

Included spare parts	Size				
	2	5, 10		20, 30	
Dosing head	x	x	x	x	x
Valves	x	x	x	x	x
Dosing head screws	x	x	x	x	x
Washers				x	x

Table 23: Spare parts sets – Dosing head including valves

You need both spare parts sets for complete maintenance:

- 1 x spare parts set – Diaphragm
- 1 x spare parts set – Dosing head including valves

16 Delivery characteristic curves

This section is intended to give you an idea of the delivery capacity that the dosing pump can achieve at specific back pressures. These delivery capacities were determined on the manufacturer's test stands. They apply at 20°C (68°F) for water, at 100% stroke frequency. The delivery capacity depends on the medium (density and viscosity) and temperature. Since these conditions vary at every installation location, you should calibrate the dosing pump.

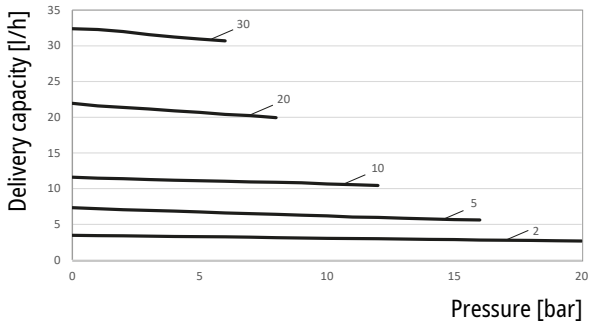

Fig. 46: Delivery characteristic curves MEMDOS SMART LDX/LAX/LPX 2 – 30

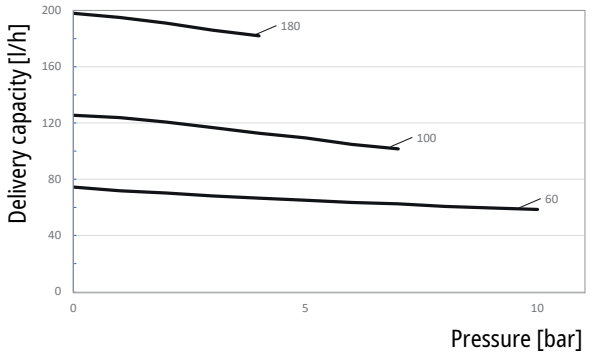

Fig. 47: Delivery characteristic curves MEMDOS SMART LDX/LAX/LPX 60 – 180

17 EU declaration of conformity

(DE) EG-Konformitätserklärung
Hiermit erklären wir, dass das nachfolgend bezeichnete Gerät aufgrund seiner Konzipierung und Bauart sowie in der von uns in Verkehr gebrachten Ausführung den einschlägigen grundlegenden Sicherheits- und Gesundheitsanforderungen der aufgeführten EG-Richtlinien entspricht. Bei einer nicht mit uns abgestimmten Änderung am Gerät verliert diese Erklärung ihre Gültigkeit.

(EN) EC Declaration of Conformity
We hereby certify that the device described in the following complies with the relevant fundamental safety and sanitary requirements and the listed EC regulations due to the concept and design of the version sold by us.
If the device is modified without our consent, this declaration loses its validity.

(FR) Déclaration de conformité CE
Nous déclarons sous notre propre responsabilité que le produit ci-dessous mentionné répond aux exigences essentielles de sécurité et de santé des directives CE énumérées aussi bien sur le plan de sa conception et de son type de construction que du modèle que nous avons mis en circulation.
Cette déclaration perdra sa validité en cas d'une modification effectuée sur le produit sans notre accord explicite.

(ES) Declaración de conformidad CE
Por la presente declaramos que, dados la concepción y los aspectos constructivos del modelo puesto por nosotros en circulación, el aparato mencionado a continuación cumple con los requisitos sanitarios y de seguridad vigentes de las directivas de la U.E. citadas a continuación.
Esta declaración será invalidad por cambios en el aparato realizados sin nuestro consentimiento.

(NL) EU-overeenstemmingsverklaring
Ondergetekende Lutz-Jesco GmbH, bevestigt, dat het volgende genoemde apparaat in de door ons in de handel gebrachte uitvoering voldoet aan de eis van, en in overeenstemming is met de EU-richtlijnen, de EU-veiligheidsstandaard en de voor het product specifieke standaard. Bij een niet met ons afgestemde verandering aan het apparaat verliest deze verklaring haar geldigheid.

Bezeichnung des Gerätes:	Schrittmotor-Membrandosierpumpe
Description of the unit:	Stepper Motor-driven Diaphragm Dosing Pump
Désignation du matériel:	Pompe doseuse à membrane entraînée par moteur pas à pas
Descripción de la mercancía:	Bomba dosificadora de membrana con motor paso a paso
Omschrijving van het apparaat:	Stappenmotor-Membraandoseerpomp
Typ: **Type:**	MEMDOS SMART 2 – 180
EG-Richtlinien:	2006/42/EG, 2014/30/EU
EC directives:	Die Schutzziele der Niederspannungsrichtlinie 2014/35/EU wurden gemäß Anhang I, Nr. 1.5.1 der Maschinenrichtlinie 2006/42/EG eingehalten. The protective aims of the Low Voltage Directive 2014/35/EU were adhered to in accordance with Annex I, No. 1.5.1 of the Machinery Directive 2006/42/EC.
Harmonisierte Normen: **Harmonized standards:**	DIN EN ISO 12100:2011-03, DIN EN 809:2012-10, DIN EN 61000-6-2:2005, DIN EN 61000-6-3:2007 + A1:2011
Dokumentationsbevollmächtigter: **Authorised person for documentation:**	Lutz-Jesco GmbH

Heinz Lutz
Geschäftsführer / Chief Executive Officer
Lutz-Jesco GmbH
Wedemark, 19.06.2020

Lutz-Jesco GmbH
Am Bostelberge 19
30900 Wedemark
Germany

BA-10005-02 / 2 / 10/12/2025

18 Decontamination declaration

Due to legal regulations for the protection of our employees and operating facilities, we need the completed and signed declaration of decontamination in order to process your return.

1. Copy this page and complete it **for each device separately**!
2. Attach the declaration to the outside of the packaging.
3. Return the device.

Decontamination declaration

We forward the following device for repairs:

Device designation: ..... Part no.: .....

Order no.: ..... Date of delivery: .....

Reason for repair: .....

.....

.....

Medium dosed

Description: ..... Irritant: ☐ Yes ☐ No

Properties: ..... Corrosive: ☐ Yes ☐ No

We hereby certify that the device has been thoroughly cleaned inside and out before being returned, contains no hazardous chemical, biological and radioactive agents and has been drained of oil.

If the manufacturer has to perform additional cleaning, we shall be invoiced the costs incurred.

We certify that the aforementioned information is correct and complete and that the device will be returned in accordance with legal requirements.

Company / Address: ..... Phone: .....

..... Fax: .....

..... E-mail: .....

Customer no.: ..... Contact person: .....

Date, Signature: .....

19 Warranty claim

If the device breaks down within the period of warranty, please return it in a cleaned condition with the fully completed warranty claim.

1. Copy this page and fill in all fields.
2. Pack the device together with the completed warranty claim.
3. Return the device.

Warranty claim

Date: .....

Sender

Company: ..... Phone: .....

Address: ..... Fax: .....

..... E-mail: .....

..... Contact person: .....

Manufacturer order no.: ..... Delivery date: .....

Device type: ..... Serial number: .....

Nominal power / nominal pressure: .....

Fault details: .....

.....

.....

.....

.....

.....

Operating conditions of the device

Application site / site description: .....

.....

.....

Accessories used: .....

.....

.....

Commissioning (date): ..... Operating hours (approx.): .....

Please state the specific characteristics of the installation and enclose a basic sketch or photograph of the installation, indicating the materials, diameters, lengths and heights.

.....

BA-10005-02 / 2 / 10/12/2025

Notes

Lutz-Jesco GmbH

Am Bostelberge 19
30900 Wedemark
Germany
Tel.: (+49 51 30) 58 02-0
E-Mail: info@lutz-jesco.com

www.lutz-jesco.com

BA-10005-02 / 2 / 10/12/2025