Stepper motor-driven diaphragm dosing pump

MEMDOS SMART LK / LP

Operating instructions

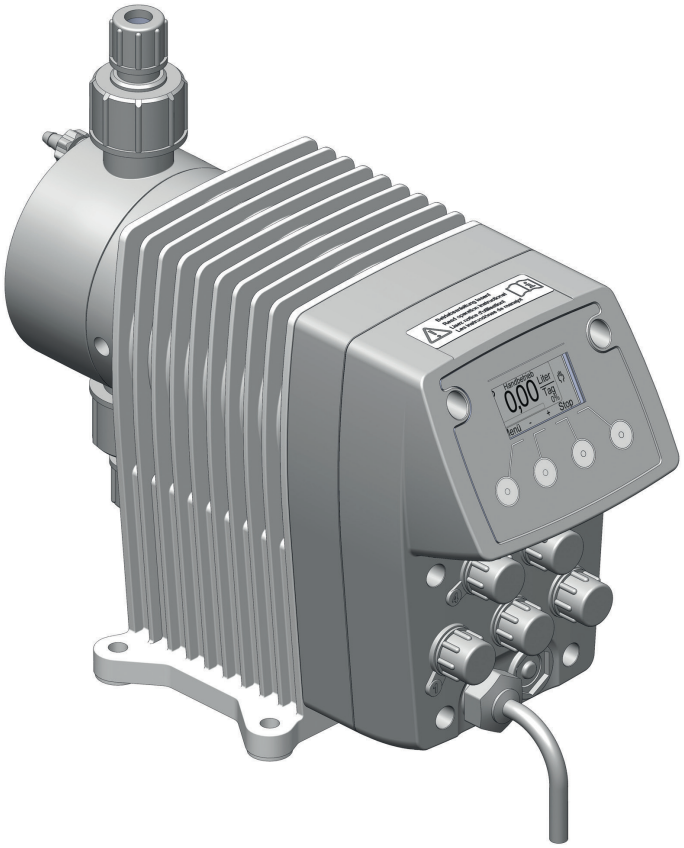

Read the operating manual!

The user is responsible for installation and operation related mistakes!

Original operating instructions

© Lutz-Jesco GmbH 2020

BA-10120-02-V04

Dosing Conveying Control | Liquids Gases Systems

Table of Contents

1 Notes for the Reader 4
1.1 General non-discrimination 4
1.2 Explanation of the signal words 4
1.3 Explanation of the warning signs 4
1.4 Identification of warnings 4
1.5 Instruction for action identification 4

2 Safety 5
2.1 General warnings 5
2.2 Hazards due to non-compliance with the safety instructions 6
2.3 Working in a safety-conscious manner 6
2.4 Personal protective equipment 6
2.5 Personnel qualification 6

3 Intended use 7
3.1 Notes on product warranty 7
3.2 Intended purpose 7
3.3 Device revision 7
3.4 Principles 7
3.5 Prohibited dosing media 7
3.6 Foreseeable misuse 7

4 Product description 9
4.1 Properties 9
4.2 Scope of delivery 9
4.3 Structure of the dosing pump 9
4.4 Function description 10
4.5 Rating plate 10

5 Technical data 12
5.1 Delivery capacity data 12
5.2 Operating conditions and limits 12
5.3 Electrical specifications 13
5.4 Other data 13

6 Dimensions 14
6.1 MEMDOS SMART LK / LP 2, 5, 10 14
6.2 MEMDOS SMART LK / LP 15, 20, 30 15

7 Installing the Dosing Pump 16
7.1 Set up information 16
7.2 Installation examples 16

8 Hydraulic installations 17
8.1 Design of the system 17
8.2 System piping 17
8.3 Aligning the dosing head 18
8.4 Hydraulic connections 18
8.5 Connecting a leakage drain 19
8.6 Connecting the dosing head venting facility 19
8.7 Hydraulic accessories 20

9 Electrical installation 22
9.1 Principles 22
9.2 Description of connection sockets 22

10 Control 26
10.1 Operator controls of the control unit 26
10.2 Explanation of menu navigation 26
10.3 Explanation of the menu icons 26
10.4 Menu settings at initial commissioning 27
10.5 Main menu 27
10.6 System setup 27
10.7 Information about the dosing pump 32
10.8 Messages of the control (only LP) 32

11 Operation 33
11.1 Commissioning the dosing pump 33
11.2 Operating modes 35
11.3 External On / Off via Release input 41
11.4 Decommissioning the dosing pump 42
11.5 Shutting down in an emergency 42
11.6 Storage 42
11.7 Transportation 42
11.8 Disposal of old equipment 42

12 Maintenance 43
12.1 Maintenance intervals 43
12.2 Tighten up dosing head bolts 43
12.3 Change the diaphragm 44
12.4 Clean suction and discharge valves 44

13 Troubleshooting 45
13.1 Type of fault 45

14 Spare parts 47
14.1 Diaphragm spare parts kits 47
14.2 Dosing head spare parts kits including valves 47

15 Delivery characteristic curves 48

16 EU Declaration of Conformity 49

17 Declaration of no objection 50

18 Warranty claim 51

19 Index 52

© Lutz-Jesco GmbH 2020
Subject to technical changes.
201221

1 Notes for the Reader

These Operating instructions contain information and behaviour rules for safe and designated operation of the dosing pump
MEMDOS SMART LK / LP.

Observe the following principles:

- Read the entire operating manual prior to starting-up the device.
- Ensure that everyone who works with or on the dosing pump has read the operating instructions and follows them.
- Keep the operating instructions for the entire service life of the dosing pump.
- Pass on the operating instructions to any subsequent owner of the dosing pump.

1.1 General non-discrimination

In this operating manual, only the male gender is used where grammar allows gender allocation. The purpose of this is to make the text easy to read. Men and women are always referred to equally. We would like to ask female readers for understanding of this text simplification.

1.2 Explanation of the signal words

Different signal words in combination with warning signs are used in this operating manual. Signal words illustrate the gravity of possible injuries if the risk is ignored:

Signal word	Meaning
DANGER	Refers to imminent danger. Ignoring this sign may lead to death or the most serious injuries.
WARNING	Refers to a potentially hazardous situation. Failure to follow this instruction may lead to death or severe injuries.
CAUTION	Refers to a potentially hazardous situation. Failure to follow this instruction may lead to minor injury or damage to property.
NOTE	Refers to a danger which, if ignored, may lead to risk to the machine and its function.

Table 1: Explanation of the signal words

1.3 Explanation of the warning signs

Warning signs represent the type and source of a danger:

Warning sign	Type of danger
	Danger point
	Danger from electrical voltage
	Danger from corrosive substances
	Danger from potentially-explosive substances
	Danger from automatic startup
	Danger of damage to machine or functional influences

Table 2: Explanation of the warning signs

1.4 Identification of warnings

Warnings are intended to help you recognise risks and avoid negative consequences.

This is how warnings are identified:

Warning sign	**SIGNAL WORD**
Description of danger. Consequences if ignored. ⇨ The arrow signals a safety precaution to be taken to eliminate the danger.	

1.5 Instruction for action identification

This is how pre-conditions for action are identified:

✓ Pre-condition for action which must be met before taking action.

🛠 A resource such as a tool or auxiliary materials required to perform the operating instructions.

This is how instructions for action are identified:

➔ Separate step with no follow-up action.

1. First step in a series of steps.

2. Second step in a series of steps.

▶ Result of the above action.

✓ **Action completed, aim achieved.**

© Lutz-Jesco GmbH 2020

2 Safety

2.1 General warnings

The following warnings are intended to help you to eliminate the dangers that can arise while handling the dosing pump. Risk prevention measures always apply regardless of any specific action.

Safety instructions warning against risks arising from specific activities or situations can be found in the respective sub-chapters.

DANGER

Mortal danger from electric shock!

Wrongly connected or located cables or damaged ones can injure you.

- ⇨ Connect the device only to a SCHUKO socket outlet protected by a ground fault circuit interrupter (GFCI).
- ⇨ Replace damaged cables without delay.
- ⇨ Do not use extension cables.
- ⇨ Do not bury cables.
- ⇨ Secure cables to avoid being damaged by other equipment.

DANGER

Danger to life through explosions!

The use of dosing pumps without ATEX certification in a potentially explosive atmospheres can result in potentially-fatal explosions.

- ⇨ Never use the dosing pump in potentially explosive areas.

WARNING

Danger from unsuitable materials

The materials of the dosing pump and hydraulic parts of the system must be suitable for the dosing medium that is used. Should this not be the case, the dosing media may leak.

- ⇨ Make sure that the materials you are using are suitable for the dosing medium.
- ⇨ Make sure that the lubricants, adhesives, sealants, etc. that you use are suitable for the dosing medium.

WARNING

Caustic burns or other burns through dosing media!

While working on the dosing head, valves and connections, you may come into contact with dosing media.

- ⇨ Use sufficient personal protective equipment.
- ⇨ Rinse the dosing pump with a liquid (e.g. water) which does not pose any risk. Ensure that the liquid is compatible with the dosing medium.
- ⇨ Release pressure in hydraulic parts.
- ⇨ Never look into open ends of plugged pipelines and valves.

WARNING

Danger of automatic start up!

After connecting the mains supply, residual dosing media in the dosing head can spray out.

- ⇨ Before connecting the mains supply, connect the dosing lines.
- ⇨ Check that all the screw connections have been tightened correctly and are leak-proof.

CAUTION

Danger when changing the dosing medium!

Changing the dosing media can provoke unexpected reactions, damage to property and injury.

- ⇨ Clean the dosing pump and the system parts in contact with the media thoroughly before changing the dosing medium.

CAUTION

Increased risk of accidents due to insufficient qualification of personnel!

Dosing pumps and their accessories may only be installed, operated and maintained by personnel with sufficient qualifications. Insufficient qualification will increase the risk of accidents.

- ⇨ Ensure that all action is taken only by personnel with sufficient and corresponding qualifications.
- ⇨ Prevent access to the system for unauthorised persons.

© Lutz-Jesco GmbH 2020
Subject to technical changes.
201221

2.2 Hazards due to non-compliance with the safety instructions

Failure to follow the safety instructions may endanger not only persons, but also the environment and the device.

The specific consequences can be:

- failure of vital functions of the dosing pump and the system,
- failure of required maintenance and repair methods,
- danger for individuals through dangerous dosing media,
- danger to the environment caused by substances leaking from the system.

2.3 Working in a safety-conscious manner

Besides the safety instructions specified in this operating manual, further safety rules apply and must be followed:

- accident prevention regulations,
- safety and operating provisions,
- safety provisions for handling dangerous substances (mostly the safety data sheets to dosing media),
- environmental protection provisions,
- applicable standards and legislation.

2.4 Personal protective equipment

Based on the degree of risk posed by the dosing medium and the type of work you are carrying out, you must use corresponding protective equipment. Read the Accident Prevention Regulations and the Safety Data Sheets to the dosing media find out what protective equipment you need.

You will require the minimum of the following personal protective equipment:

Personal protective equipment required	
	Protective goggles
	Protective clothing
	Protective gloves

Table 3: Personal protective equipment required

Wear the following personal protective equipment when performing the following tasks:

- commissioning,
- working on the dosing pump while running,
- shutdown,
- maintenance work,
- disposal.

2.5 Personnel qualification

Any personnel who work on the dosing pump must have appropriate special knowledge and skills.

Anybody who works on the dosing pump must meet the conditions below:

- attendance at all the training courses offered by the owner,
- personal suitability for the respective activity,
- sufficient qualification for the respective activity,
- training in handling of the dosing pump,
- knowledge of safety equipment and the way this equipment functions,
- knowledge of this operating manual, particularly of safety instructions and sections relevant for the activity,
- Knowledge of fundamental regulations regarding health and safety and accident prevention.

All persons must generally have the following minimum qualification:

- training as specialists to carry out work on the dosing pump unsupervised,
- sufficient training that they can work on the dosing pump under the supervision and guidance of a trained specialist.

These operating instructions differentiate between these user groups:

2.5.1 Specialist staff

Thanks to their professional training, knowledge, experience and knowledge of the relevant specifications, specialist staff are able to perform the job allocated to them and recognise and/or eliminate any possible dangers by themselves.

2.5.2 Trained persons

Trained persons have received training from the operator about the tasks they are to perform and about the dangers stemming from improper behaviour.

In the table below you can check what qualifications are the pre-condition for the respective tasks. Only people with appropriate qualifications are allowed to perform these tasks!

Qualification	Activities
Specialist staff	■ Assembly ■ Hydraulic installations ■ Electrical installation ■ Maintenance ■ Repairs ■ Commissioning ■ Taking out of operation ■ Disposal ■ Fault rectification
Trained persons	■ Storage ■ Transportation ■ Control ■ Fault rectification

Table 4: Personnel qualification

© Lutz-Jesco GmbH 2020

3 Intended use

3.1 Notes on product warranty

Any non-designated use of the product can compromise its function or intended protection. This leads to invalidation of any warranty claims!

Please note that liability is on the side of the user in the following cases:

- The dosing pump is operated in a manner which is not consistent with these operating instructions, particularly safety instructions, handling instructions and the section "Intended Use".
- If people operate the product who are not adequately qualified to carry out their respective activities.
- No original spare parts or accessories of Lutz-Jesco GmbH are used.
- Unauthorised changes are made to the device by the user.
- The user uses different dosing media than those indicated in the order.
- The user does not use dosing media under the conditions agreed with the manufacturer such as modified concentration, density, temperature, contamination, etc.

3.2 Intended purpose

The dosing pump MEMDOS SMART LK / LP is intended for the following purpose: the conveying and dosing of liquids.

3.3 Device revision

This operating manual applies to the following devices:

Device	Month / year of manufacture	Firmware
MEMDOS SMART LK	08/2016 onwards	
MEMDOS SMART LP	08/2016 onwards	From 01:59

Table 5: Device revision

3.4 Principles

- Before delivery, the manufacturer inspected the dosing pump and operated it under specific conditions (with a specific dosing medium with a specific density and temperature, with specific pipe dimensions, etc.) Since these conditions vary at every installation location, you must calibrate the dosing pump after delivery. For information on the calibration procedure, refer to section 11.1.3 „Calibrating the dosing pump“ on page 34.
- Comply with the information regarding the operating and environmental conditions (see chapter "Technical data").
- Any restrictions regarding the viscosity, temperature and density of dosing media must be followed. You must only use dosing media at temperatures above freezing point or below the boiling point of the respective medium.
- The materials of the dosing pump and hydraulic parts of the system must be suitable for the dosing medium that is used. In this connection, note that the resistance of these components can change in dependence on the temperature of the media and the operating pressure.

> Information on the suitability of materials combined with different dosing media can be found in the Compatibility Chart of Lutz-Jesco GmbH.
> The information in this resistance list is based on information from the material manufacturers and on expertise obtained by Lutz-Jesco from handling the materials.
> As the durability of the materials depends on many factors, this list only constitutes initial guidance on selecting material. In all cases, test the equipment with the chemicals you use under operating conditions.

- The dosing pump is not intended for outdoor use unless appropriate protective measures have been taken.
- Avoid leaks of liquids and dust into the casing and avoid direct exposure to sunlight.
- You must never operate dosing pumps in a potentially explosive atmosphere if they do not have corresponding nameplates or an appropriate EU Declaration of Conformity for potentially explosive atmospheres.

3.5 Prohibited dosing media

The dosing pump must not be used for these media and substances:

- Gaseous media,
- radioactive media,
- solid substances,
- combustible media,
- all other media that are not suitable for delivery using this dosing pump.

3.6 Foreseeable misuse

Below, there is information about the applications of the dosing pump or associated equipment that are not considered to be intended use. This section is intended to allow you to detect possible misuse in advance and to avoid it.

© Lutz-Jesco GmbH 2020
Subject to technical changes.
201221

Foreseeable misuse is assigned to the individual stages of the product lifetime:

3.6.1 Incorrect assembly

- Unstable or unsuitable bracket
- Dosing pump bolted wrongly or loosely

3.6.2 Incorrect hydraulic installation

- Suction and pressure lines dimensioned incorrectly
- Unsuitable connection of the pipes due to wrong material or unsuitable connections.
- Suction and pressure lines mixed-up
- Damage to threads due to them being tightened too much
- Bending of pipelines
- No free return flow of the pressure relief valve
- Excessive demand due to the pressure differences between the suction and discharge valves
- Through-suction at installation without back-pressure valves
- Damage due to undamped acceleration mass forces
- Exceeding the admissible pressure on the suction and discharge sides
- Using damaged parts

3.6.3 Incorrect electrical installation

- Connecting the mains voltage without a protective earth
- Unsecured mains or one that does not conform to standards
- Not possible to immediately or easily disconnect the power supply
- Wrong connecting cables for mains voltage
- Dosing pump accessories connected to wrong sockets
- Diaphragm monitoring not connected or defective
- Protective earth removed

3.6.4 Incorrect start-up

- Start-up with damaged system
- Shut-off valves closed at commissioning
- Closed suction or pressure line, e.g. due to blockages
- Personnel was not informed before the start-up
- System was recommissioned after maintenance without all the protective equipment and fixtures, etc. being reconnected.
- Inadequate protective clothing or none at all

3.6.5 Incorrect operation

- Protective equipment not functioning correctly or dismantled
- Modification of the dosing pump without authority
- Ignoring operational disturbances
- Elimination of operational disturbances by personnel without adequate qualifications
- Deposits in the dosing head due to inadequate purging, particularly with suspensions
- Bridging the external fuse
- Operation made more difficult due to inadequate lighting or machines that are difficult to access
- Operation not possible due to dirty or illegible display of the dosing pump
- Delivery of dosing media for which the system is not designed
- Delivery of particulate or contaminated dosing media
- Inadequate protective clothing or none at all

3.6.6 Incorrect maintenance

- Carrying out maintenance during ongoing operation
- Carrying out work that is not described in the operating manual
- No adequate or regular inspection of correct functioning
- No replacement of damaged parts or cables with inadequate insulation
- No securing against reactivation during maintenance work
- Using cleaning materials that can cause reactions with the dosing media
- Inadequate cleaning of the system
- Unsuitable purging medium
- Unsuitable cleaning materials
- Detergents left in system parts
- Using unsuitable cleaning equipment
- Using the wrong spares or lubricants
- Contaminating the dosing medium with lubricant
- Installing spare parts without following the instructions in the operating manual
- Blocking venting orifices
- Pulling off sections of the plant
- Contamination at installation without a dirt trap
- Mixing up the valves
- Mixing up the sensor lines
- Not reconnecting all the lines
- Damaging or not installing all the seals
- Not renewing seals
- Not paying attention to safety data sheets
- Inadequate protective clothing or none at all

3.6.7 Incorrect decommissioning

- Not completely removing the dosing medium
- Dismantling lines while the dosing pump is running
- Device not disconnected from the power supply
- Using the wrong dismantling tools
- Inadequate protective clothing or none at all

3.6.8 Incorrect disposal

- Incorrect disposal of dosing media, operating resources and other materials
- No labelling of hazardous substances

© Lutz-Jesco GmbH 2020

4 Product description

4.1 Properties

The MEMDOS SMART is a stepper motor-driven diaphragm dosing pump that is used when precise dosing results are required.

They are characterized by the following properties:

- Output range from 2 – 30 l/h, up to 20 bar
- Power supply 110—240 V, 50/60 Hz, IP65, 25 W
- Microprocessor-controlled drive
- Integrated dosing head ventilation (only MEMDOS SMART LK / LP 2, LK / LP 5 and LK / LP 10 with plastic dosing head)
- Suitable for wall and floor mounting
- Material finishes PVC, PP, PVDF and stainless steel
- Stroke frequency can be precisely adjusted via the keyboard
- A slow-motion mode
- Batch dosing with manual start, external start and interval
- Pulse input (increase and reduction)
- Level input with early warning and main alarm
- Release input for external start/stop
- Supply amount displayed in various units
- Restriction of the maximum delivery rate is possible
- Diaphragm replacement programme
- Stroke feedback output
- Alarm relay output
- Graphic display with multi-language menu

Also with MEMDOS SMART LP:

- Analogue input (for increase and reduction)
- Two slow-motion modes
- Batch dosing with timer
- Dosing control input
- Diaphragm failure input for leak monitoring
- Ethernet interface (optional)

4.2 Scope of delivery

Please compare the delivery note with the scope of delivery. The following items are part of the scope of delivery:

- MEMDOS SMART LK or LP dosing pump,
- One set each of hose clamping connections for the suction and discharge sides for hoses with diameters of 4/6 mm, 6/9 mm and 6/12 mm (made of PVC, PP and PVDF),
- Covering caps electrical connections:
  4 for MEMDOS SMART LK
  5 for MEMDOS SMART LP
  6 for MEMDOS SMART LP-Net
- Mains cable,
- Operating instructions,
- Inspection report and test certificate (optional),
- Accessory kit (optional),

4.3 Structure of the dosing pump

4.3.1 General Overview

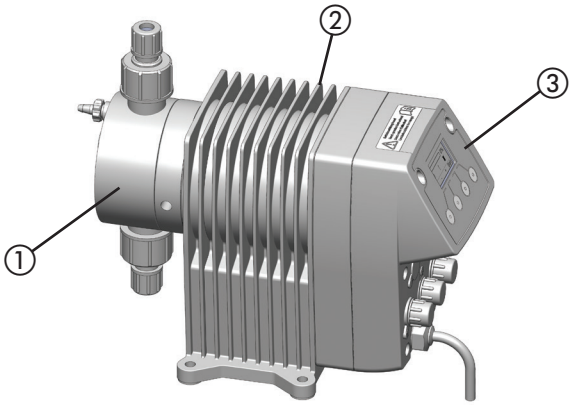

Fig. 1: Dosing pump overview MEMDOS SMART LK / LP

No.	Description
1	Dosing head
2	Drive unit
3	Control box

Table 6: General Overview

4.3.2 Dosing head

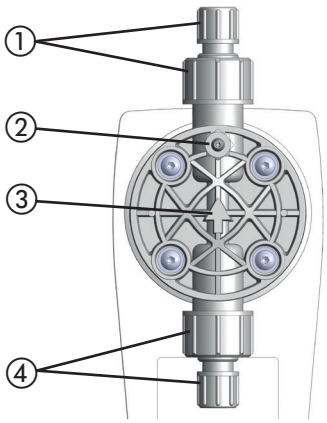

Fig. 2: Dosing head

No.	Description
1	Valve and connection on the discharge side
2	Integrated dosing head ventilation (only MEMDOS SMART LK / LP 2, LK / LP 5 and LK / LP 10 with plastic dosing head)
3	Arrow indicating the direction of throughflow of the dosing medium (plastic version only)
4	Valve and connection on the suction side

Table 7: Dosing head

© Lutz-Jesco GmbH 2020
Subject to technical changes.
201221

4.3.3 Control elements

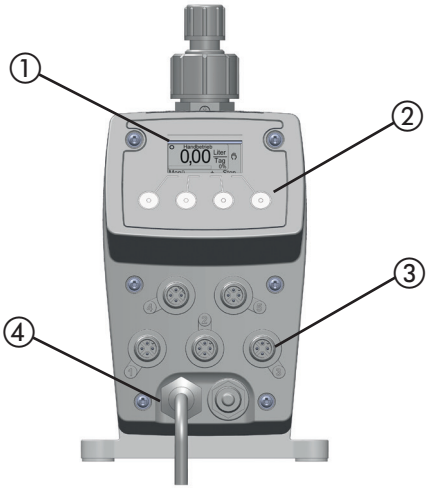

Fig. 3: Controller of dosing pump MEMDOS SMART LK / LP

No.	Description
1	Graphic display
2	Multifunction keys on the contol unit for operator inputs
3	Connection ports for external operation
4	Mains cable for power supply

Table 8: Designation of components

4.4 Function description

Dosing pumps are positive displacement pumps. They are used if precisely defined delivery of a medium is necessary. A constant volume per stroke or time is delivered.

The system delivers or meters the dosing medium by means of a repeated sequence of suction strokes followed by pressure strokes. This results in a pulsing flow.

If the dosing pump is in the suction stroke phase, the diaphragm is pulled into the rear final position. Due to the resulting vacuum in the dosing head, the discharge valve closes, the suction valve opens and dosing medium flows from the suction line into the dosing head.

If the dosing pump is in the pressure stroke phase, the diaphragm is moved into the front final position. Due to the pressure in the dosing head, the suction valve closes and the dosing medium flows through the discharge valve from the dosing head into the pressurised pipe.

4.5 Rating plate

There is information on the equipment about safety or the product's way of functioning. The information must stay legible for the duration of the service life of the product.

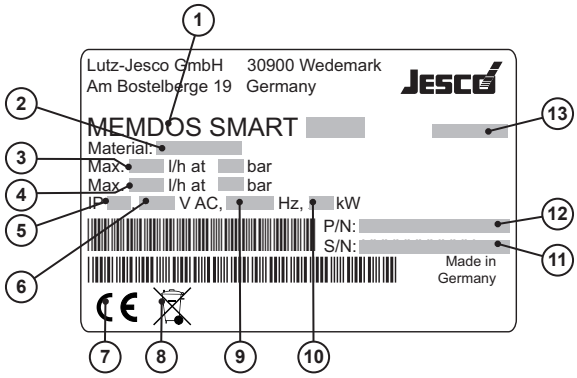

Fig. 4: Rating plate MEMDOS SMART LK / LP

No.	Description
1	Product, type, nominal size
2	Material of the dosing head / seals
3	Maximum delivery capacity at average pressure
4	Maximum delivery capacity at maximum pressure
5	Protection class
6	Voltage supply
7	Label showing conformity with applicable European directives
8	WEEE label
9	Frequency
10	Power consumption
11	Serial number
12	Part number
13	Month / year of manufacture

Table 9: Rating plate

© Lutz-Jesco GmbH 2020

Conveying characteristics

The design of the dosing pump enables it to perform the pressure and suction stroke at different speeds. For low supply rates, for example, the dosing pump performs the suction stroke at the maximum speed and adjusts the speed of the pressure stroke to match the desired supply rate. This produces a constant supply stream, which gives you a low-pulsation, smooth dosing.

In addition, *Slow Motion 1* (LK and LP) and *Slow Motion 2* (only LP) modes enable reduction of the suction speed. Thereby, more viscous media can be more easily and more accurate dosing attained.

Settings

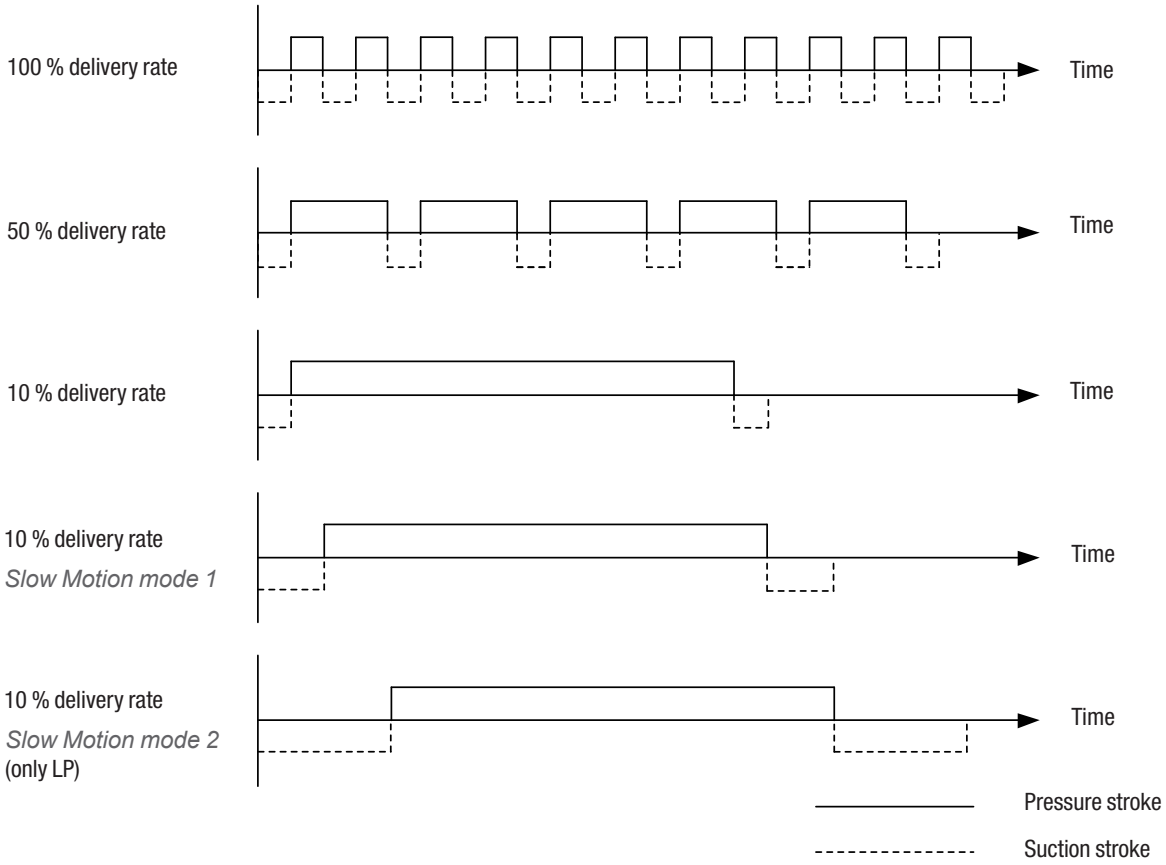

Fig. 5: Selecting available dosing programs

> When the slow motion modes are activated, the maximum delivery rate of the dosing pump is reduced:
> Slow Motion 1: reduction to 67%
> Slow Motion 2: reduction to 40%

5 Technical data

5.1 Delivery capacity data

Please note that some of this data only represents guide values. The actual capacity of a dosing pump depends on various factors. For approximate values of the delivery capacity at different pressures, refer to chapter 15 „Delivery characteristic curves“ on page 48.

Information	Unit		MEMDOS SMART LK / LP Size				
		2	5	10	15	20	30
Delivery capacity at max. backpressure	l/h	2.4	5.1	10.7	13.7	20.4	30.7
	ml/stroke	0.22	0.57	1.19	1.52	2.27	3.41
Max. delivery pressure	bar	20 (16*)	16	10	6	5	3
Delivery capacity at average backpressure	l/h	2.6	5.7	11.3	14.4	21.2	31
	ml/stroke	0.28	0.63	1.26	1.60	2.36	3.44
Average delivery pressure	bar	10	8	5	3	2.5	1.5
Max. stroke frequency	min-1	150					
Suction lift for non-gassing media	mWS	3					

Table 10: Output data

* with a PVC design.

5.2 Operating conditions and limits

Information	Unit	MEMDOS SMART LK / LP Size
		2 – 30
Approved ambient temperature	°C	5 – 45 (with PVC components 5 – 40)*
Relative humidity	%	max. 90
Max. sound pressure level	dB(A)	51 – 56
Max. supply pressure	mbar	800
Viscosity limits	mPa·s	300** / 1000***
Adjustable dosing range	%	0 – 100

Table 11: Operating conditions and limits

* Use of the dosing pump at ambient temperatures below 5 °C must be checked individually. In such cases, please contact the manufacturer.

** With a viscosity of ~300 mPa·s and above, you must use spring-loaded valves.

*** If the viscosity of the medium is larger than 1000 mPa·s, the use of the dosing pump must be checked individually. In such cases, please contact the manufacturer.

© Lutz-Jesco GmbH 2020

Approved media temperature

Information	Unit	MEMDOS SMART LK / LP (all sizes)
Dosing head made of PVC	°C	0 – 35
Dosing head made of PP	°C	0 – 60
Dosing head made of PVDF	°C	0 – 60
Dosing head made of stainless steel (1.4571)	°C	0 – 80

Table 12: Approved media temperature

5.3 Electrical specifications

Information	Unit	MEMDOS SMART LK / LP (all sizes)
Voltage supply		110 – 240 V AC, -10% / +5%, 50/60 Hz
Power consumption	W	25

Table 13: Electrical specifications

5.4 Other data

Information	Unit	MEMDOS SMART LK / LP Size					
		2	5	10	15	20	30
Weight (with dosing head made of PVC, PP, PVDF)	kg	2.2 approx.					
Weight (with dosing head made of stainless steel (1.4571))	kg	3.3 approx.					
Diameter of diaphragm	mm	33	39		54		
Electrical cable	m	1.8 m (with mains plug)					
Protection class		IP65 (with covering caps on the connections)					
Insulation class		F					
Valve connection		G5/8 male					
Valve size		DN3	DN4				

Table 14: Other data

© Lutz-Jesco GmbH 2020
Subject to technical changes.
201221

6 Dimensions

6.1 MEMDOS SMART LK / LP 2, 5, 10

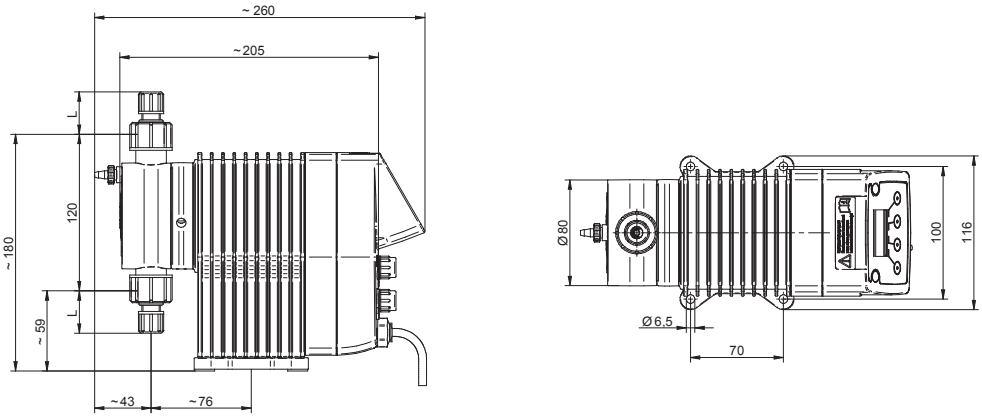

Fig. 6: Dimensioned drawing of MEMDOS SMART LK / LP 2, 5, 10 with dosing head made of PVC, PP or PVDF (all dimensions in mm)

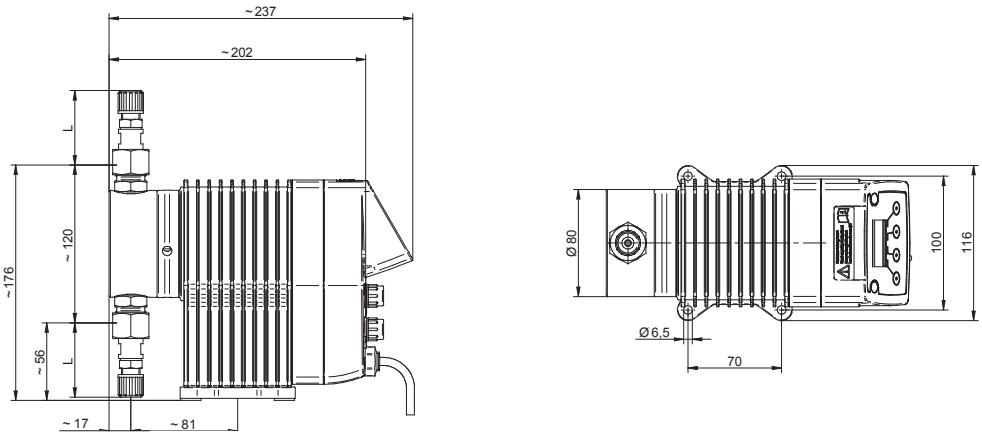

Fig. 7: Dimensioned drawing of MEMDOS SMART LK / LP 2, 5, 10 with dosing head made of stainless steel (1.4571) (all dimensions in mm)

Hose clamp connector	Material	Scale	Nominal width	L
LK / LP 2	PVC / PP / PVDF	4/6 mm	DN4	31
	Stainless steel	4/6 mm	DN4	50
LK / LP 5, 10	PVC / PP / PVDF	4/6 mm	DN4	31
		1/4x3/8"	1/4"	13
		6/9 mm	DN6	34
		6/12 mm	DN6	13
	Stainless steel (1.4571) / PVDF	4/6 mm	DN4	50
		6/9 mm	DN6	54

© Lutz-Jesco GmbH 2020

6.2 MEMDOS SMART LK / LP 15, 20, 30

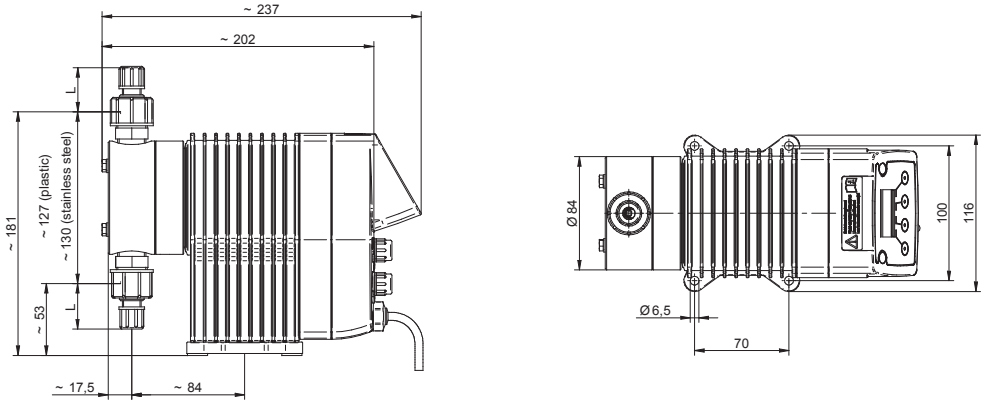

Fig. 8: Dimensioned drawing of MEMDOS SMART LK / LP 15, 20, 30 with dosing head made of PVC, PP, PVDF or stainless steel (1.4571) (all dimensions in mm)

Hose clamp connector	Material	Scale	Nominal width	L
LK / LP 15, 20, 30	PVC / PP / PVDF	4/6 mm	DN4	31
		1/4x3/8"	1/4"	13
		6/9 mm	DN6	34
		6/12 mm	DN6	13
	Stainless steel (1.4571) / PVDF	4/6 mm	DN4	50
		6/9 mm	DN6	54

© Lutz-Jesco GmbH 2020
Subject to technical changes.
201221

7 Installing the Dosing Pump

DANGER

Mortal danger from electric shock!

Electrically conductive liquid can enter pump housings, cable screw connections and mains connectors.

⇨ Make sure that all protective measures comply at least with the requirements of protection class IP65.

⇨ Always set up the dosing pump such that water cannot enter the housing.

CAUTION

Danger of personal injury and material damage!

A dosing pump that is difficult to access represents a danger due to incorrect operation and faulty maintenance.

⇨ Install the dosing pump such that it is accessible at all times.

7.1 Set up information

When installing, follow the basic principles below:

- The valves must be vertical: Discharge valve at top, suction valve at bottom. in this connection, pay attention to the arrow on the dosing head. The dosing head must be aligned such that the arrow points vertically upwards.
- You should install the dosing pump at a convenient height for operation.
- It must not be installed under the ceiling.
- The frame of foundation for fixing the dosing pump must not be subjected to jolts. The pump must be vibration-free and stable.
- There must be enough free space in the area of the dosing head and the suction and discharge valves for these parts to be easily dismantled if required. The entire space requirement for installation and maintenance is approximately 1 m².
- The distance from the sides of the dosing pump to the wall or other dosing pumps or equipment must be at least 3 cm. There must be a guaranteed flow of circulating air.
- The maximum ambient temperature must be complied with, see chapter 5.2 „Operating conditions and limits“ on page 12. If necessary, radiant heat from surrounding equipment must be screened.
- Avoid exposure to direct sunlight.
- The dosing pump is not intended for use out of doors unless appropriate protective measures have been taken to prevent dust and water from entering the housing.
- For the dimensions of the fastening holes, refer to chapter 6 „Dimensions“ on page 14.
- The tightening torque for the fastening bolts is 1.5 – 2 Nm.

7.2 Installation examples

7.2.1 Installation on a wall console

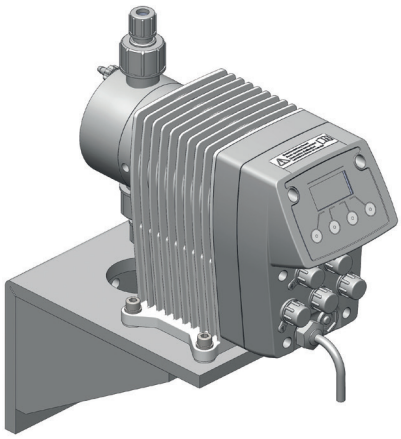

Fig. 9: Installation on a wall console

To reduce the structure-borne noise, the dosing pump is bolted to the wall bracket using rubber elements. The materials necessary for this are included with the wall bracket.

7.2.2 Installation on the wall

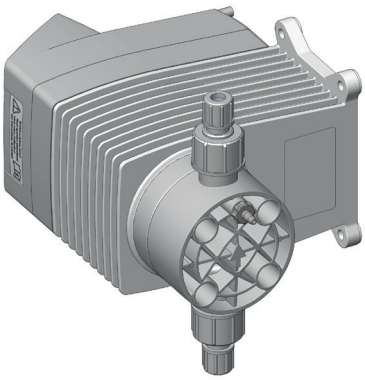

Fig. 10: Installation on the wall

The dosing pump can be mounted to the floor or directly to the wall without the need for additional elements. Turn the dosing head appropriately to ensure the flow direction of the medium through the dosing head.

© Lutz-Jesco GmbH 2020

8 Hydraulic installations

In this chapter, you will find information about the hydraulic parts of a system that you should install or that can install additionally. In many cases, you must install hydraulic accessories to be able to use all the functions that the dosing pump offers, to guarantee functional safety or to achieve a high level of dosing precision.

WARNING

Caustic burns or other burns through dosing media!

A diaphragm rupture, blocked pressure lines or the use of material not suitable for the dosing medium can result in the discharge of dosing medium. Depending on the type and hazardousness of the dosing medium, this can result in injury.

- ⇨ Wear the recommended personal protective equipment.
- ⇨ Make sure that the materials you are using are suitable for the dosing medium.
- ⇨ Make sure that the lubricants, adhesives, sealants, etc. that you use are suitable for the dosing medium.
- ⇨ Install a leakage drain.
- ⇨ Install pressure relief valves.

CAUTION

Danger of personal injury and material damage!

High peak pressures can lead to piping vibrating and cause them to snap. This can result in injury from piping or escaping dosing media.

- ⇨ Install pulsation dampeners.

NOTE

Damage to drives due to overloading

The pressure conditions between the suction and discharge sides must be balanced; otherwise, overloading can result. This can lead to uncontrolled dosing processes, damage to the piping and to the dosing pump.

- ⇨ Ensure that the pressure on the discharge side is at least 1 bar than on the suction side.

NOTE

Locking of threads

Stainless steel and plastic parts (particularly those made of PVC) that are bolted together in a detachable connection (e.g. the dosing head and the valves) can lock. This makes them difficult to release.

- ⇨ Before bolting, grease the corresponding parts with a lubricant (e.g. PTFE spray). Ensure that the lubricant is compatible with the dosing medium.

8.1 Design of the system

- The dosing pump s technical data must be taken into account and the plant s layout must be set up appropriately (e.g. pressure loss when rating the lines with regard to their nominal diameter and length).
- The entire system and its integrated dosing pump must be designed in such a way that an escaping dosing medium (due to the failure of wearing parts such as the diaphragm, or burst hoses) does not lead to permanent damage to system parts or the premises.
- The leakage opening of the dosing head must be visible so that you can detect a diaphragm rupture. It must be possible for the outflow from the leakage drain to be on a free downwards gradient.
- If you use hazardous dosing media, the installation must be designed such that no disproportionately high consequential damages arise due to dosing media escaping.
- To avoid dosing errors after the end of the process, the dosing pump must be locked hydraulically.
- To allow you to easily inspect the pressure conditions in the system, you should provide connections for pressure gauges close to the suction and discharge valves.

8.2 System piping

- The system piping must not exert any force on the connections and valves of the dosing pump.
- This means that steel piping should be connected to the dosing pump by means of flexible pipe sections.
- The nominal diameters of the pipework and the installed fittings should be rated the same as or greater than the nominal diameters of the dosing pump's suction and discharge valves.
- The suction line should be kept as short as possible.
- You should avoid intertwined hoses.
- Avoid loops, since air bubbles can collect.

© Lutz-Jesco GmbH 2020
Subject to technical changes.
201221

8.3 Aligning the dosing head

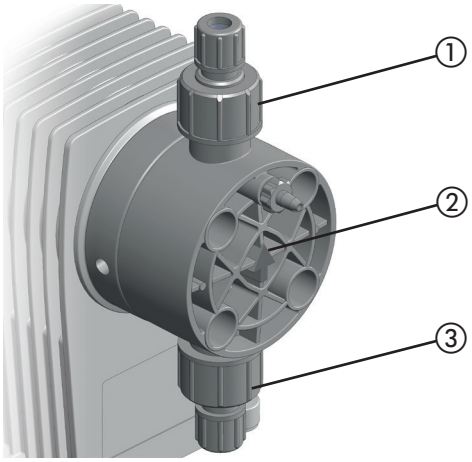

Fig. 11: Aligning the dosing head

When connecting the dosing lines to the dosing pump, you must observe the direction of through-flow (see arrow 2). The dosing head must be aligned vertically. The alignment can be changed in 90° intervals.

The suction valve (3) must always point downwards. Accordingly, arrow (2) and pressure valve (1) always point upwards. This is irrespective of the positioning of the dosing head to the drive.

8.4 Hydraulic connections

8.4.1 Connecting hose clips

Choose the hose connection according to the condition of the hose (material, inner diameter, wall thickness) in order to ensure maximum pressure resistance.

8.4.1.1 Size 4/6 and 6/9

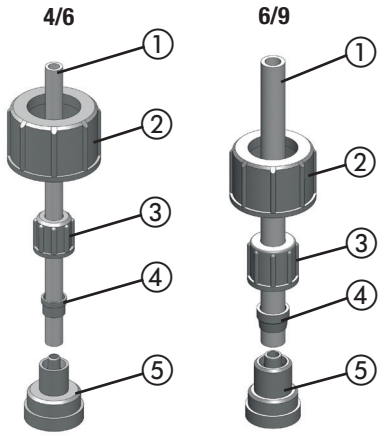

Fig. 12: Hose clips 4/6 and 6/9 (internal and external diameters in mm)

Perform the following working steps:

1. Cut the hose (1) to the appropriate length neatly and at an exact right angle.
2. Place a gasket that is suitable for the dosing medium between the connection (5) and the valve.
3. Screw the connecting piece to the dosing pump's valve using the union nut (2).
4. Thread the union nut (3) and the clamping ring (4) onto the hose.
5. Plug the hose all the way in to the grommet of connection piece.
6. Push the clamping ring onto the grommet of connection piece and screw it to the union nut.
7. Carry out the same procedure with the connection to the dosing pump's other valve.

✓ **Hose clip connected.**

8.4.1.2 Size 6/12

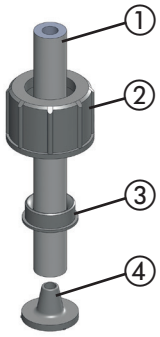

Fig. 13: Hose clip 6/12 (internal and external diameter in mm)

Size 6/12 hose clips only have a union nut. It clamps the hose onto the grommet of the connection piece and at the same time fastens on the dosing pump's valve.

Perform the following working steps:

1. Cut the hose (1) to the appropriate length neatly and at an exact right angle.
2. Place a gasket that is suitable for the dosing medium between the connection (4) and the valve.
3. Push the union nut (2) and the cutting ring (3) over the hose.
4. Press the end of the hose onto the grommet of connection piece. You can do this more easily by moistening the end of the hose on the inside or applying some lubricant to the grommet in the cone area. You should push at least two thirds of the hose onto the grommet of the connection piece.
5. Push the cutting ring over the hose into the cone area on the grommet of connection piece.
6. Screw the union nut onto the valve of the dosing pump.

✓ **Hose clip connected.**

© Lutz-Jesco GmbH 2020

8.4.2 Making the glue-in connection

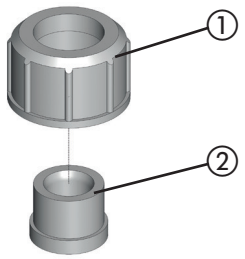

Fig. 14: Glue-in connection

Perform the following working steps:

1. Cut the PVC tube to length.
2. Push the union nut (1) onto the tube.
3. Stick the bonded coupling sleeve (2) to the tube (follow the instructions of the adhesive manufacturer).
4. Screw the union nut onto the valve of the dosing pump. Use a gasket that is suitable for the dosing medium.

✓ **Glue-in connection made.**

8.4.3 Making the cemented connection

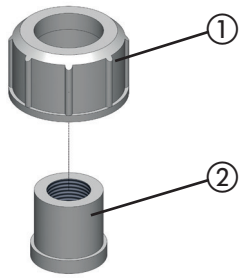

Fig. 15: Cemented connection

Perform the following working steps:

1. Cut the tube to length.
2. Cut the thread (2) onto the end of the tube.
3. Push the union nut (1) onto the tube.
4. Seal the thread. When choosing your sealing material, take into account its resistance to material, temperature and pressure.
5. Screw the union nut onto the valve of the dosing pump. Use a gasket that is suitable for the dosing medium.

✓ **Cemented connection made.**

> Under normal conditions, you only need to screw the hydraulic connections finger-tight. However, due to the material settling, the pre-tension of the screw connection can slacken. This means that you must re-tighten the screw connection before carrying out commissioning.

8.5 Connecting a leakage drain

Lutz-Jesco GmbH dosing pumps are produced to the highest of quality standards with a long service life. However, some parts are subject to operational wear. This is the case particularly with the diaphragms that are continuously subjected to forces during the suction and discharge strokes and to the effects of the dosing medium.

If a diaphragm ruptures, the dosing medium starts to leak. This leakage is drained via the leakage opening. On the flange of the dosing head, there are three openings for this purpose. Depending on the alignment of the dosing pump, the leakage is drained via the downward opening.

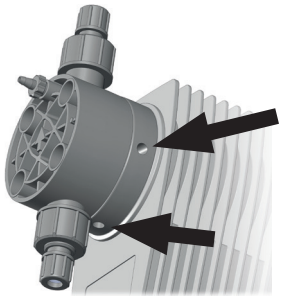

Fig. 16: Openings of the leakage drain

> **NOTE**
>
> **Damage to drives due to effervescent media**
>
> If a hose is connected to the leakage drain and it is routed back into the dosing tank, effervescent media can enter the drive and damage it.
>
> ⇨ Collect the leakage in a collecting pan.
>
> ⇨ As an alternative, you can route the leakage back to to the dosing tank using a funnel. You should install the funnel at an adequate distance from the leakage opening.

8.6 Connecting the dosing head venting facility

The dosing heads of the MEMDOS SMART LK / LP 2, 5 and 10 have an integrated dosing head venting unit (except for dosing heads made of stainless steel).

For the procedure when venting, refer to chapter 11.1.1 „Venting the dosing pump“ on page 33.

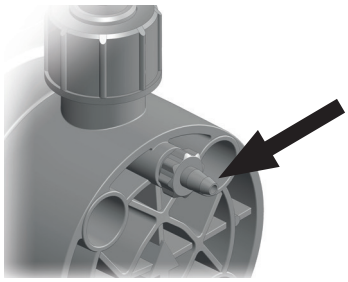

Fig. 17: Dosing head venting facility with hose connection

© Lutz-Jesco GmbH 2020
Subject to technical changes.
201221

Perform the following working steps:

1. Connect a 4/6 hose to the dosing head venting facility.
2. Route the other end of the hose into the dosing tank or a collecting tank.

✓ **Dosing head venting facility connected.**

8.7 Hydraulic accessories

The following chapter is intended to give you an overview of installation options.

Please note that these operating instructions are no substitute for the instructions supplied with the accessories in each case. The corresponding documentation supplied with the product applies to safety information and provides exact instructions on assembly.

8.7.1 Flow sensor FLOWCON LP2

The FLOWCON LP 2 flow meter was especially developed for monitoring oscillating volume flows. The function is based on the evaluation of the pulsating dosing behaviour typical to dosing pumps. With stepper motor-driven dosing pumps, only the signal on the suction side can be evaluated; the flow on the discharge side remains relatively constant.

During the suction stroke, a float is lifted from the flowing fluid, thus activating a reed switch. Setting the switch point adapts the function to the size of the dosing pump and the viscosity of the medium.

This makes it possible not only to sense whether the dosing pump is delivering fluid, but also whether the set dosing capacity is achieved. With constant operating conditions, the reproducibility remains at 10…20%.

For the electrical connection of the FLOWCON, see section 9.2.5.1.

> Follow the operating manual for the FLOWCON LP 2 flow meter. It contains instructions regarding operation using the MEMDOS SMART LP dosing pump.

8.7.2 Injection nozzle

If the pressure line enters a main line, it is advisable to install an injection nozzle.

Injection nozzles have three main functions:

- Dosing the medium into a main line,
- Preventing flowback into the pressure line through a non-return valve.

Notes on assembly:

- Double-ball injection nozzles must be installed into the main line vertically from the bottom. You can install hose and spring-loaded injection nozzles any way you like.
- With dosing media that tend to crystallize, it is advisable to carry out installation into the main line from the bottom. This prevents air bubbles from being trapped.
- Many dosing media tend to contaminate the injection nozzles, which can lead to blockages. In cases like this, it is advisable to install an injection nozzle that is easy to dismantle and block off.

8.7.3 Contact-type water meter

The contact-type water meter measures the throughflow in a pipe and sends a pulse to the dosing pump, which then starts dosing. This means that ideal proportional dosing is also possible with large throughflow fluctuations.

The contact water meter is connected to connection port 2 (see chapter 9.2.2 „Connection socket 2“ on page 23).

8.7.4 Pressure-relief valve

Pressure relief valves have an important safety function for protecting the dosing pump and the associated pipes and fittings. The dosing pump can generate a pressure that is many times the rated one. A blocked pressure line can lead to dosing medium escaping.

An improperly high pressure can occur if:

- the shut-off valves are closed even though the dosing pump is running,
- pipes block.

At an appropriate pressure, a pressure relief valve opens a bypass line and protects the system in this way from damage caused by over-pressure.

Notes on assembly:

- The line for returning dosing medium from the pressure relief valve must be routed to the dosing tank or to a collecting pan.
- The pressure in the dosing tank must not be too high so that it is possible to accommodate the returned dosing medium.
- As an alternative, the system can return dosing medium into the suction line in front of the dosing pump. In this case, there must not be a non-return valve or a foot valve in the suction line.
- You should install the pressure relief valve as close as possible to the dosing head.

8.7.5 Back-pressure valve

Back-pressure control valves are necessary if:

- there are considerably fluctuating system pressures,
- the pressure on the suction side is higher than on the discharge side or if you intend to carry out dosing into depressurized lines.

In cases like this, if you do not use a back-pressure valve, imprecise dosing results will occur or overloading will result. The back-pressure valve solves these problems by generating a defined, constant backpressure.

In some circumstances, a back-pressure valve is unnecessary if you use a hose injection nozzle and if the backpressure that it generates is adequate.

8.7.6 Pulsation dampener

Pulsation dampeners have the following functions:

- Damping pulsating delivery flows for processes that require low-pulsation dosing,
- Reducing the throughflow resistance with long pipelines.

© Lutz-Jesco GmbH 2020

When installed on the suction side:

- Damping of acceleration mass forces and with this reduction of wear on the dosing pump.
- Preventing cavitation (pull-off of the liquid column) due to too high acceleration.

However, pulsation dampeners also have important safety functions, since they prevent pressure peaks from arising that lead to piping vibrating and cause them to snap.

This problem can occur:

- with the high amplitudes of the vibrations,
- when using long pipes (the severity of the pulsation increases with the length of the pipe),
- when using rigid piping instead of elastic hoses.

Notes on assembly:

- You should carry out assembly in the direct vicinity of the location where you want to damp the pressure peaks (directly in front of the suction valve or directly behind the discharge valve).
- Pulsation dampeners should be installed with throttle valves or back-pressure valves installed directly behind them. By setting the valves appropriately, you can further-optimise damping of the pulsations.
- To prevent unnecessary pipe friction losses, you should lay the connecting line straight and in accordance with the rated width of the pulsation dampener.
- You must separately fasten relatively large pulsation dampeners and ones with hose connections.
- Pipelines must not transfer any mechanical tensions onto the pulsation dampener.

8.7.7 Priming aid

Priming aids are particularly advisable:

- in the case of dosing pumps with small volumetric displacements per stroke or with low stroke length settings,
- with high suction hights,
- with highly dense dosing media,
- at priming for the first time due to dry valves and air in the suction line and the dosing head,
- in dosing systems with frequent downtimes.

Further advantages resulting from priming aids:

- preventing cavitation in the suction line,
- gas removal,
- optical dosing control with small amounts,
- smoothing of the suction flow.

8.7.8 Level monitoring

Level monitoring of suction-side feeding of the dosing medium to prevent the tank being sucked dry and to ensure that it can be topped up again in good time.

8.7.9 Dosing of suspensions

When dosing suspensions, the dosing head must be rinsed regularly to prevent depositing. To do this, you install a feed line for the rinsing medium (water) in the suction side installation.

8.7.10 Suction pressure regulator

A suction pressure regulator may be necessary if the suction-side installation of the system demonstrates a varying suction pressure or supply pressure:

- Dosing pumps that are installed above dosing tanks deliver less as the tank empties, since the suction head increases.
- Dosing pumps that are installed below dosing tanks deliver less as the tank empties, since the positive delivery pressure reduces.

Further problems that can occur:

- Greater wear on the dosing pump, e.g. diaphragm rupture due to the effects of heavy forces with particularly high tanks and high-density dosing media.
- Idling of the dosing tank in the case of a diaphragm rupture or pipe breakage.
- Impermissibly high forces in the pump transmission that occur when dosing pumps receive the dosing medium directly from the pressure line.
- Reduced performance or destruction of fittings due to cavitation with long suction lines.

Installing a suction pressure regulator is a remedy for the problems above. The suction pressure regulator is opened by the dosing pump's suction pressure. This ensures that no dosing medium can flow if the dosing pump is not running or no vacuum can be generated following a pipe fracture.

Notes on assembly:

- When using a large suction pressure regulator, you should provide a pulsation dampener on the suction side.

© Lutz-Jesco GmbH 2020
Subject to technical changes.
201221

9 Electrical installation

DANGER

Mortal danger from electric shock!

If there is an electrical accident, you must disconnect the dosing pump from the mains as quickly as possible.

⇨ Install an emergency stop switch or integrate the dosing pump into the plant safety concept.

CAUTION

Danger of automatic start up!

The dosing pump does not have an ON/OFF switch and may start to pump as soon as it is connected to the mains supply.

⇨ Install an emergency stop switch or integrate the dosing pump into the plant safety concept.

NOTE

Damage due to incorrect mains voltage

The dosing pump can be damaged if you connect it to the wrong mains voltage.

⇨ Observe the information on the mains supply that is given on the rating plate.

NOTE

Insufficient electromagnetic compatibility

When you connect the dosing pump to a socket without an attached protective earth, it is not possible to guarantee the interference radiation and interference immunity according to EMC regulations.

⇨ Only connect the dosing pump to sockets with an attached protective earth.

9.1 Principles

- The dosing pump has a 110 – 240 V AC 50/60 Hz wide-range power supply unit.
- The electrical connection comply with local regulations.
- The dosing pump must be plugged into a grounded power outlet.
- To avoid dosing errors at the end of the process, the dosing pump must be locked electrically.
- The dosing pump must not be operated by switching the mains voltage on or off.
- Signal cables must not be laid parallel to high-voltage current lines or mains cables. You must route supply and signal lines in separate channels. An angle of 90° is required at line crossings.

9.2 Description of connection sockets

Fig. 18: Connection sockets 1 – 5

Inputs	Connection socket
Release input	1
Pulse input	2
Analogue input (only LP)	2
Level input	3
Diaphragm rupture input (only LP)	5

Table 15: Inputs of the control unit

Outputs	Connection socket
Stroke feedback output, alternative: Fault optocupler output	1
Fault reporting relay output	4

Table 16: Outputs of the control unit

© Lutz-Jesco GmbH 2020

9.2.1 Connection socket 1

Connection port 1 is equipped with an optocupler output and a switching input
The optocupler can be configured for stroke feedback or a fault message. The connections and switch data are listed in the following tables.

Pin	Function
Optocoupler (pin 1 and 2)	max. 30 V DC, max. 5 mA
Release input (pin 3 and 4)	Potential-free contact Open NC or closed NO Freely programmable

Table 17: Technical data connection port 1

Pin	M12x1 (A-coded)	Assignments	Connection	Cable colour*	
1		Optocoupler collector (+)	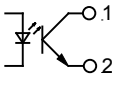	Brown	BN
2		Optocoupler emitter (-)		White	WH
3		Ground (GND)	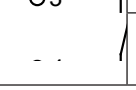	Blue	BU
4		External On/Off		Black	BK

Table 18: Connection socket 1

* Applies to cable colours of cables from Lutz-Jesco GmbH. No liability is accepted for cables from other manufacturers.

9.2.1.1 Stroke feedback output

At the stroke feedback output, the dosing pump reports back each executed stroke to the pulse input of another dosing pump. In this way, it is possible to network several dosing pumps and to trigger synchronized dosing strokes.

The stroke feedback output can continue to be used e.g. to evaluate the signal in a PLC (stroke counting for batch mode).

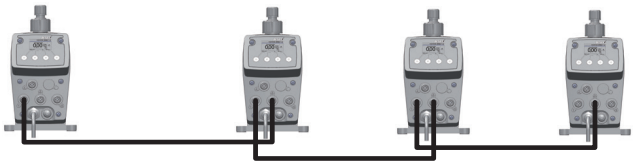

Fig. 19: Synchronization of several dosing pumps by means of stroke feedback and pulse control

9.2.1.2 Fault reporting optocupler

The optocupler will notify dosing pump faults upon activation of this function. The message can be evaluated e.g. with a PLC.

To set the fault-reporting optocoupler function, see section 10.6.3 „Menu item “Fault reporting”“ on page 28.

9.2.1.3 Release input

Using the Release input, it is possible to start or stop the dosing pump externally.

To set the release input function, see section10.6.5 „Set “Release input” menu item“ on page 29.

9.2.2 Connection socket 2

9.2.2.1 Analogue input (only LP)

The analog input makes it possible to control the delivery capacity by means of a 0/4 – 20 mA signal. The delivery capacity is regulated via the stroke frequency.

- 0/4 - 20 mA signal
- Invertible
- Current range variable
- Working resistance: 200 Ohm (because of the electronic fuse), not potential-free

For information on setting the *Analog input* operating mode, see page 37.

Pin	M12x1 (A-coded)	Assignments	Connection	Cable colour*	
1				Brown	BN
2		(+)0/4 - 20 mA		White	WH
3		Ground (GND)		Blue	BU
4	-	+ 5 V DC	-	Black	BK

Table 19: Connection socket 2

* Applies to cable colours of cables from Lutz-Jesco GmbH. No liability is accepted for cables from other manufacturers.

9.2.2.2 Pulse input

The pulse input makes it possible to control the delivery capacity by means of pulses. The system regulates the delivery capacity by means of the dosing pump's stroke frequency and number of strokes in dependence on the number of pulses and the pulse spacing.

- Provided potential-free contact
- For potential-free NO contact, e.g. a contact-type water meter
- 5 V DC supply voltage (current across all connections limited to a total maximum of 50 mA)
- Pulse length min. 4 ms

For information on setting the *Pulse input* operating mode, see page 35.

© Lutz-Jesco GmbH 2020
Subject to technical changes.
201221

Pin	M12x1 (A-coded)	Assignments	Connection	Cable colour*	
1		Pulses	1	Brown	BN
2		(+)0/4 - 20 mA		White	WH
3		Ground (GND)	3	Blue	BU
4	-	+ 5 V DC	-	Black	BK

Table 20: Connection socket 2

* Applies to cable colours of cables from Lutz-Jesco GmbH. No liability is accepted for cables from other manufacturers.

9.2.3 Connection socket 3

9.2.3.1 Level input

Connection for level monitoring of a dosing tank (e.g. a suction line with a float switch).

- 5 V DC supply voltage (current across all connections limited to a total maximum of 50 mA)
- Alert and main alarm
- Potential-free contact
- Programmable NC or NO contact

For information on setting the *Level input* function, see chapter 10.6.4 „Set "Level input" menu item" on page 29.

Pin	M12x1 (A-coded)	Assignments	Connection	Cable colour*	
1		Pre-alarm	1	Brown	BN
2		Main alarm	2	White	WH
3		Ground (GND)	3	Blue	BU
4	-	+ 5 V DC	-	Black	BK

Table 21: Connection socket 3

* Applies to cable colours of cables from Lutz-Jesco GmbH. No liability is accepted for cables from other manufacturers.

9.2.4 Connection socket 4

9.2.4.1 Alarm relay output

Using the alarm relay, it is possible to forward outwards disturbances on the dosing pump.

- Voltage-free changeover contact
- Max. 250 V AC, 2.5 A or max. 30 V DC, 2.5 A,

For information on setting the *Alarm relay*, see chapter 10.6.3 „Menu item "Fault reporting"" on page 28.

Pin	M12x1 (B-coded)	Assignments	Connection	Cable colour*	
1		Break (NC) contact	1	Brown	BN
2		Make (NO) contact	2	White	WH
3		-		Blue	BU
4		Changeover contact	4	Black	BK

Table 22: Connection socket 4

* Applies to cable colours of cables from Lutz-Jesco GmbH. No liability is accepted for cables from other manufacturers.

9.2.5 Connection socket 5

9.2.5.1 Dosing control input

The optionally-available FLOWCON LP2 can be connected to connection port 5. It allows you to monitor the dosing medium flow motion after a dosing pump stroke.

- The 5 V DC power supply is performed on connection 5 of the dosing pump. The maximum permissible current of all connected devices is 50 mA.

Pin	M12x1 (A-coded)	Assignments	Connection	Cable colour*	
1		FLOWCON LP2	1	Brown	BN
2		-		White	WH
3		Ground (GND)	3	Blue	BU
4		+ 5 V DC		Black	BK

Table 23: Connection socket 5

* Applies to cable colours of cables from Lutz-Jesco GmbH. No liability is accepted for cables from other manufacturers.

9.2.5.2 Diaphragm rupture input

A connection to a leak sensor in the flange of the dosing head to monitor for a possible diaphragm rupture.

- 5 V DC supply voltage (current across all connections limited to a total maximum of 50 mA)

Pin	M12x1 (A-coded)	Assignments	Connection	Cable colour*	
1		-		Brown	BN
2		Leak sensor	2	White	WH
3		Ground (GND)	3	Blue	BU
4		+ 5 V DC		Black	BK

Table 24: Connection socket 5

© Lutz-Jesco GmbH 2020

9.2.6 Ethernet connection port (only MEMDOS SMART LP-Net)

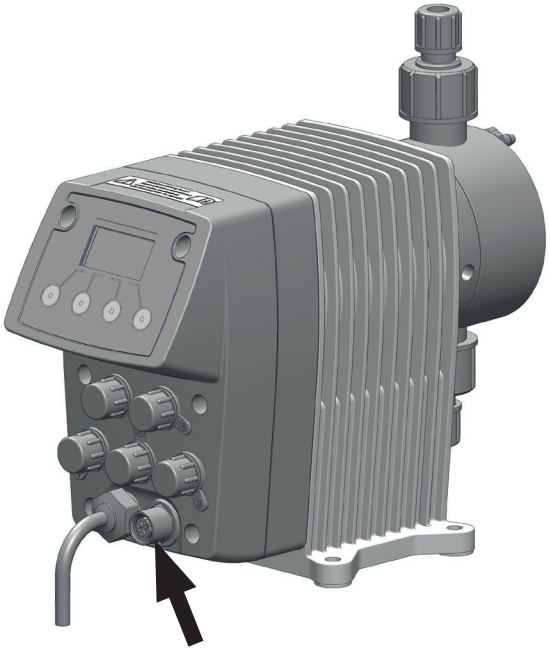

Fig. 20: Ethernet connection socket

The network connection socket makes it possible to control the stroke frequency and the number of strokes. Furthermore, it is also possible to transmit all error and status messages in the opposite direction.

The dosing pump has a network input in the form of a 4-pole, D-coded M12x1 female connector. To perform the functions of a typical RJ-45 plug connection for Ethernet networks, Lutz-Jesco GmbH provides special twisted-pair network cables in various lengths. If you use third-party cables, choose a Category 3 cable with an impedance of 100 Ohm or above.

- Modbus TCP/IP protocol
- 10 Mbps

For information on setting the *Network mode* operating mode, see section 11.2.5 „Network mode (only MEMDOS SMART LP-Net)“ on page 41.

Pin	M12x1 (A-coded)	Assignments	Connection
1		TX+	Pair 1
2		RX+	Pair 2
3		TX-	Pair 1
4		RX-	Pair 2
-		Screen	-

Table 25: Ethernet connection socket

9.2.6.1 Installing a wired network

During installation, observe the following points:

- The Ethernet is cabled in a star topology. The maximum cable length is 100 m.
- You must route separately as a bundle the different categories of cables (e.g. power supply, data lines and sensitive lines for measuring purposes). In this connection, cables should cross at an angle of 90°.
- There must either be a minimum distance between the power cable and data lines of 10 cm or you must install a partition or route the data line in a metal pipe.
  If this is not possible, use separate cable support systems.
- Only use screened cables and plug-in connectors.
- Route copper wires outside cable support systems through plastic pipes.
- Temperatures that are too high or too low result in lower mechanical and electrical loading or lead to damage.
- Data lines must only be subjected to a defined tensile load; otherwise, the electrical or attenuation values can no longer be guaranteed.
- When pulling cables out of the cable drum, avoid looping or pulling over sharp edges.
- With copper wires, implement potential equalization; when doing this, differentiate between hazardous and non-hazardous areas.
- Electrical, magnetic and electromagnetic fields affect signal transmission and under some circumstances can destroy electronic components.

© Lutz-Jesco GmbH 2020
Subject to technical changes.
201221

10 Control

10.1 Operator controls of the control unit

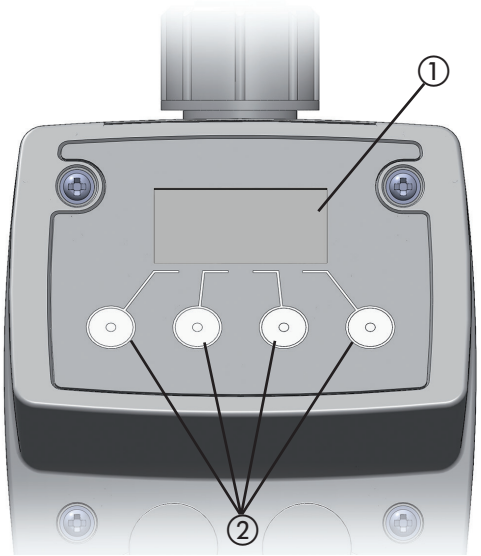

Fig. 21: Operator controls of the control unit

No.	Explanation
1	Graphic display
2	Four multifunction keys

Table 26: Operator controls of the control unit

You operate the dosing pump using the four keys below the display. The keys have different assignments depending on where you are located at any one time in the menu structure. The system shows the respective functions of the keys at the bottom of the display:

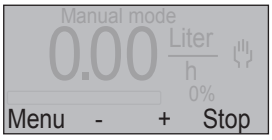

Fig. 22: Function assignments of the multifunction keys

In this example, the first key from the left has the `Menu` function; the second one has the `-` function; the third one has the `+` function and the fourth one has the `Stop` function.

The `+` and `-` selection keys as well as the ↑ and ↓ keys have a repeat function, i.e. if you keep them pressed down, the system automatically repeats the key function.

The display brightness reduces 45 seconds after your last input.

Two minutes after your last input, the control unit goes back to the start screen of the selected operating mode in each case.

> The dosing pump does not have an ON/OFF switch. After being disconnected from the power supply, the dosing pump starts in the operating mode and configuration that you selected last.

10.2 Explanation of menu navigation

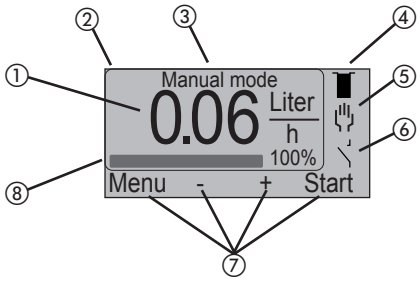

Fig. 23: Representation of the control unit on the display

No.	Explanation
1	Calculated delivery capacity (units per minute, hour or day)
2	Symbol for the dosing status display
3	Designation of active operating mode
4	Symbol for level monitoring
5	Symbol for the active operating mode
6	Symbol for external ON/OFF
7	Variable assignment of the four menu keys on the dosing pump
8	Bar for representing the stroke frequency or delivery capacity

Table 27: Explanation of menu navigation

10.3 Explanation of the menu icons

10.3.1 Dosing status display

Symbol	Meaning
○	Diaphragms stationary (no dosing stroke)
●	Diaphragms in stroke phase (dosing stroke)

Table 28: Explanation of the menu symbols – Dosing status display

10.3.2 Level monitoring

Symbol	Meaning
	Dosing tank full
	Dosing tank at minimum (alert)
	Dosing tank empty (main alarm)

Table 29: Explanation of the menu symbols – Level monitoring

© Lutz-Jesco GmbH 2020

10.3.3 Operating modes

Symbol	Meaning
	Manual mode
	Analogue input (only LP)
	Pulse input
	Batch mode (interval/timer mode) (only LP)
	Network mode (LP-Net only)

Table 30: Explanation of the menu symbols – Operating modes

10.3.4 Release input

Symbol	Meaning
	Contact open
	Contact closed

Table 31: Explanation of the menu symbols – Release input

10.3.5 Release code

Symbol	Meaning
	Password protection active

Table 32: Explanation of the menu symbols – release code

10.4 Menu settings at initial commissioning

On first connecting the dosing pump to the mains or resetting it to the factory default setting, it is automatically in the *Language* menu (menu 6.3).

Now you can set the menu language.

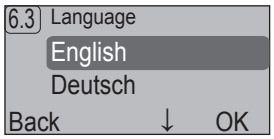

Fig. 24: Menu 6.3 Language

1. Use the ↑ or ↓ key to choose a language.
2. Press OK.
   ▶ The dosing pump displays menu 6, *System setup*.
3. Press Menu.
   ▶ The dosing pump displays menu 1 *Main menu*.
4. Press Back.
   ▶ The dosing pump displays the start screen. In the factory default setting, the *Manual operating* mode is preset and saved with a stroke frequency of 0 % (no dosing).

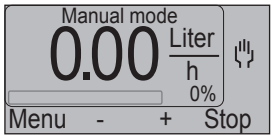

Fig. 25: Start screen of the dosing pump after initial commissioning

10.5 Main menu

➔ Press Menu.
▶ The dosing pump displays menu 1 *Main menu*.

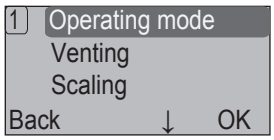

Fig. 26: Main menu

The main menu lists the main functions of the dosing pump:

- *Operating mode* (see section 11.2 „Operating modes“ on page 35),
- *Venting* (see section 11.1.1 „Venting the dosing pump“ on page 33),
- *Diaphragm change* (see section 12.3 „Change the diaphragm“ on page 44),
- *Restriction* (see section 11.1.2 „Scaling the delivery capacity“ on page 34),
- *Calibration* (see section 11.1.3 „Calibrating the dosing pump“ on page 34),
- *System setup* (see section 10.6 „System setup“ on page 27),
- *Info* (see section 10.7 „Information about the dosing pump“ on page 32).
- Only LP: *Messages* (see section 10.8 „Messages of the control (only LP)“ on page 32).

10.6 System setup

In the *System setup* menu item, you configure all the dosing parameter's general parameters that do not depend on an operating mode.

1. Press Menu.
2. Use the ↑ or ↓ key to choose the *System setup* menu item and press OK.
   ▶ The dosing pump displays the *System setup* menu.

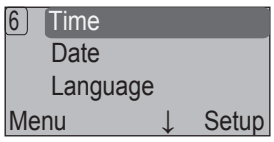

Fig. 27: System setup menu

© Lutz-Jesco GmbH 2020
Subject to technical changes.
201221

10.6.1 Set "Language" menu item

1. Use the ↑ or ↓ key to choose the *Language* menu item and press `Setup`.

You can choose from the following options:

- *English* (factory default setting),
- *Deutsch*,
- *Francais*,
- *Espanol,*
- *Portugues*,
- *Netherlands,*
- *Polski.*

2. Use the ↑ or ↓ key to choose a language and press `OK`.

✓ **The language is set.**

10.6.2 Set "Units" menu item

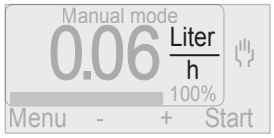

Fig. 28: Display of the unit of delivery capacity

1. Use the ↑ or ↓ key to choose the *Units* menu item and press `Setup`.

You can choose from the following units:

- Litres/Day,
- Litres/Hr.
- USgal/Day (American gallons),
- USgal/Hr. (American gallons),
- I.gal/Day (Imperial gallons),
- I.gal/Hr (Imperial gallons),
- ml/Min.

2. Use the ↑ or ↓ key to choose the desired unit and press `OK`.

✓ **The unit is set.**

10.6.3 Menu item "Fault reporting"

Faults to the dosing pump can be notified externally using the fault reporting function. This can be performed using the fault reporting relays or the fault reporting optocupler. When activating the fault reporting optocupler in the menu, the relays will also be activated and can be used in parallel.

For connection see section 9.2.4.1 „Alarm relay output“ on page 24 and section 9.2.1.2 „Fault reporting optocupler“ on page 23.

1. Use ↑ or ↓ to select the menu item *Fault message* and press `Setup`.

You can choose from the following options:

- *Not active* (factory default setting),
- *NO relay* (Normally open),
- *NC relay* (Opener),
- *Optocoupler N.O.* (Normally open),
- *Optocoupler N.C.* (Opener).

2. Use the ↑ or ↓ key to choose the desired function and press `OK`.

✓ **“Fault message” set.**

10.6.3.1 Configuring the fault reporting relay

NO relay

Situation		Alarm relay output		Relays
Voltage supply	Fault	Pins 1/4	Pins 2/4	
No	No	closed	open	inactive
	Yes	closed	open	inactive
Yes	No	closed	open	inactive
	Yes	open	closed	active

Table 33: Configuration of NO relay

NC relay

Situation		Alarm relay output		Relays
Voltage supply	Fault	Pins 1/4	Pins 2/4	
No	No	closed	open	inactive
	Yes	closed	open	inactive
Yes	No	open	closed	active
	Yes	closed	open	inactive

Table 34: Configuration of NC relay

10.6.3.2 Configuring the fault reporting optocupler

The optocupler only switches with the supply voltage on.

Situation		Output
Optocoupler function	Fault	Pins 1/2 (socket 1)
N.O.	No	open
	Yes	closed
N.C.	No	closed
	Yes	open

Table 35: Configuring fault reporting optocoupler

 © Lutz-Jesco GmbH 2020

10.6.4 Set "Level input" menu item

Level monitoring of the dosing medium feed on the suction side with two alarm stages: Alert and main alarm

Connection see section 9.2.3.1 „Level input“ on page 24

1. Use the ↑ or ↓ key to choose the *Level input* menu item and press `Setup`.

You can choose from the following options:

- *Not active (factory default setting),*
- *Alarm = contact* (issues an alarm when the float contact is closed),
- *Alarm = open* (issues an alarm when the float contact is open; setting for standard level monitoring systems).

2. Use the ↑ or ↓ key to choose the desired function and press `OK`.

✓ **"Level input" is set.**

> The system displays the selected setting of the level input as an icon on the start screen of each operating mode.

10.6.4.1 "Level input" configuration

Status	Display	Level input		Dosing pump
		Alarm = contact	Alarm = open	
Tank full		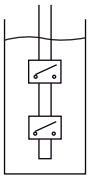	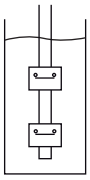	Running
Tank at minimum (alert)		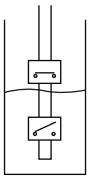	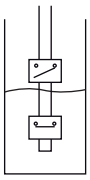	Running
Tank empty (main alarm)		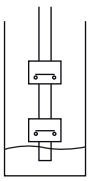	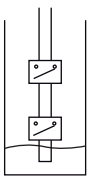	Stopped

Table 36: Level input configuration

10.6.5 Set "Release input" menu item

Option of starting or stopping the dosing pump externally.

Connection see section 9.2.1 „Connection socket 1“ on page 23.

For information on starting and stopping the dosing pump, see chapter 11.3 „External On / Off via Release input“ on page 41.

1. Use the ↑ or ↓ key to choose the *Release input* menu item and press `Setup`.

You can choose from the following options:

- *Not active (factory default setting),*
- *Run = contact* (enables the dosing pump if both contacts are closed),
- *Run = open* (enables the dosing pump if both contacts are open).

2. Use the ↑ or ↓ key to choose the desired function and press `OK`.

✓ **"Release input" is set.**

> The system displays the selected setting of the Release input as an icon on the start screen of each operating mode.

10.6.6 Activating the Release code

If the *Release code* is activated, operation of the dosing pump is blocked. You can only perform settings after entry of the correct *release code*.

WARNING

Caustic burns or other burns through dosing media!

If the Release code is activated, operation of the dosing pump is blocked. If a dosing pump has been started without the Release code being entered, it can only be stopped by means of the power supply. In unfavourable cases, if the user has inadvertently activated or forgotten the release code, the dosing pump cannot be quickly stopped and injuries may result.

⇨ Install an emergency stop switch or integrate the dosing pump into the plant safety concept.

You can set any *Release code* you like from 0001 to 9999.

1. Use the ↑ or ↓ key to choose the *Release code* menu item and press `Setup`.
   ▶ The dosing pump displays menu 6.10 *Release code*.

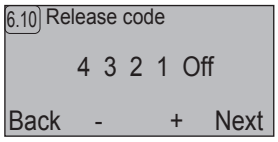

Fig. 29: Release code

2. Use the + and - keys to set a value of 0 to 9 for the first digit of the code and then press `Continue`.
3. Proceed as described under point 2 for the other digits.
4. Choose the last item *Off* and press +.

5. Press `Back`.
   ▶ The *Release code* is activated. The dosing pump displays the corresponding symbol:

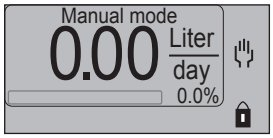

Fig. 30: Start screen with activated Release code

✓ **Release code activated.**

10.6.6.1 Entering the Release code

Once you press any key, you must enter the *Release code*. If you enter the code correctly, you have 120 seconds in which to operate the dosing pump. When the 120 seconds have elapsed, you must re-enter the *Release code*, even if you are in the middle of making another entry (this does not include settings in the menus).

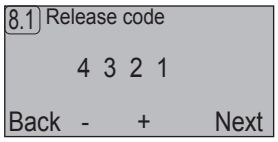

Fig. 31: Entering the Release code

1. Use the `+` and `-` keys to set a value of 0 to 9 for the first digit of the code and then press `Continue`.
2. Proceed as described under point 1 for the other digits.
3. After entering all the digits, press `OK`.
   ▶ If your input is correct, the dosing pump displays the start screen.

> If you have forgotten the code, please contact Lutz-Jesco GmbH.

✓ **Release code entered.**

10.6.6.2 Deactivating the Release code

1. Press `Menu`.
2. Use the ↑ or ↓ key to choose the *System setup* menu item and press `OK`.
3. Use the ↑ or ↓ key to choose the *Release code* menu item and press `Setup`.
4. Keep pressing `Continue` until *On* is selected.
5. Press `-`.
6. Press `Back`.

✓ **Release code deactivated.**

10.6.7 Activating the safety code

Protects the *System setup* menu from unauthorized access.

You can set any *Safety code* you like from 0001 to 9999.

1. Use the ↑ or ↓ key to choose the *Safety code* menu item and press `Setup`.
   ▶ The dosing pump displays menu 6.11 *Safety code.*

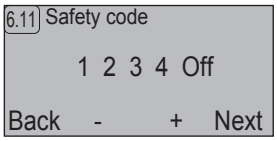

Fig. 32: Safety code

2. Use the `+` and `-` keys to set a value of 0 to 9 for the first digit of the code and then press `Continue`.
3. Proceed as described under point 2 for the other digits.
4. Choose the last item *Off* and press `+`.
5. Press `Back`.
   ▶ The *Safety code* is activated. You must enter it when accessing the *System setup* menu.

✓ **The safety code is activated.**

10.6.7.1 Entering the safety code

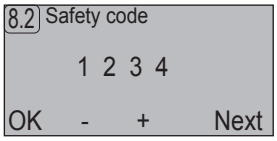

Fig. 33: Entering the safety code

1. Use the `+` and `-` keys to set a value of 0 to 9 for the first digit of the code and then press `Continue`.
2. Proceed as described under point 1 for the other digits.
3. After entering all the digits, press `OK`.
   ▶ If your input is correct, the dosing pump displays the *System setup* menu.

✓ **Safety code entered.**

> If you have forgotten the code, please contact Lutz-Jesco GmbH.

10.6.7.2 Deactivating the safety code

1. Press `Menu`.
2. Use the ↑ or ↓ key to choose the *System setup* menu item and press `OK`.
3. Enter the correct *safety code* and press `OK`.
4. Use the ↑ or ↓ key to choose the *Safety code* menu item and press `Setup`.
5. Keep pressing `Continue` until *On* is selected.
6. Press `-`.
7. Press `Back`.

✓ **The safety code is deactivated.**

© Lutz-Jesco GmbH 2020

10.6.8 Set "Factory default setting" menu item

Resets the dosing pump's control unit settings to the factory default setting.

1. Use the ↑ or ↓ key to choose the *Factory default setting* menu item and press `Setup`.
2. Press `OK`.

▶ The dosing pump displays the *Language* menu (menu 6.3).

✓ **The dosing pump is reset to the factory default setting.**

10.6.9 Set "Slow motion" menu item

Set slow mode to dose viscous media. The suction speed can be reduced.

1. Use the ↑ or ↓ key to choose the *Slow motion* menu item and press `Setup`.

You can choose from the following options:

- *Off (factory default setting),*
- *Slow Motion 1* (50 % of the standard suction speed),
- *Slow Motion 2* (25% of the standard suction speed, only LP).

2. Use the ↑ or ↓ key to choose the desired function and press `OK`.

▶ The system displays the selected *Slow Motion* mode on the start screen after the respective operating mode.

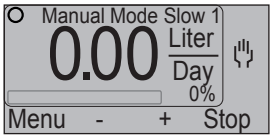

Fig. 34: "Slow Motion 1" mode display in manual mode

10.6.10 Set "User setup" menu item (only LP)

This menu item allows you to save the settings you made in the dosing pump.

10.6.10.1 Saving own settings

1. Use the ↑ or ↓ key to choose the *User setup* menu item and press `Setup`.
2. Use the ↑ or ↓ to choose *Save* and press `OK`.

✓ **Own settings saved.**

10.6.10.2 Loading own settings

1. Use the ↑ or ↓ key to choose the *User setup* menu item and press `Setup`.
2. Use the ↑ or ↓ to choose *Load* and press `OK`.

✓ **Own settings loaded.**

10.6.11 Set "IP address" menu item (-Net only)

This menu item allows you to set the network address. You local network administrator specifies the address. It is not possible to set up a subnet, a proxy or a gateway.

1. Use the ↑ or ↓ key to choose the *IP address* menu item and press `Setup`.
2. Use the `+` and `-` keys to set a value of 001 to 255 for the first digit of the IP address and then press `Continue`.
3. Proceed as described under point 2 for the other digits of the IP address.
4. Press `Back`.

✓ **IP address is set.**

10.6.12 Set the menu point “Setting dosing control” (only LP)

With FLOWCON LP2 as optional accessories, the flow of the dosing medium is monitored after the stroke of the dosing pump.

- For information regarding the hydraulic installation, see section 8.7.1.
- For the electrical connection of the FLOWCON, see section 9.2.5.1.

Follow the operating manual for the FLOWCON LP 2 flow meter. It contains instructions regarding operation using the MEMDOS SMART LP dosing pump.

10.6.13 Set the menu point “Setting diaphragm rupture” (only LP)

As an option, the dosing pump MEMDOS SMART LP is supplied with a leak sensor in the diaphragm flange; in the case of a diaphragm rupture, the sensor passes on a signal to the dosing pump and stops it.

1. Use the ↑ or ↓ key to choose the Diaphragm rupture menu item and press `Setup`.

You can choose from the following options:

- *Not active* (factory default setting),
- *Alarm = contact* (issues an alarm if the sensor output is closed for 10 seconds; setting for standard leak sensor),
- *Alarm = open* (issues an alarm if the sensor output is open for 10 seconds).

2. Use the ↑ or ↓ key to choose the desired function and press `OK`.

✓ **"Diaphragm rupture" is set.**

10.6.14 Set "Time" menu item

1. Use the ↑ or ↓ key to choose the *Time* menu item and press `Setup`.
2. Use the `+` and `-` keys to set the desired hour and press `Continue`.
3. Use the `+` and `-` keys to set the desired minute.

> ℹ If you keep the key pressed down, the dosing pump keeps incrementing the value by two hours or two minutes.

4. Press `Back`.

✓ **The time is set.**

10.6.15 Set "Date" menu item

1. Use the ↑ or ↓ key to choose the *Date* menu item and press `Setup`.

© Lutz-Jesco GmbH 2020
Subject to technical changes.
201221

2. Use the + and - keys to set the desired day and press Continue.
3. Use the + and - keys to set the desired month and press Continue.
4. Use the + and - keys to set the desired year and press Continue.
5. Use the + and - keys to set the desired day of the week.

> If you wish to use the *batch mode* function of the MEMDOS SMART LP dosing pump, you need to set the correct day of the week.

6. Press Back.

✓ **The date is set.**

10.7 Information about the dosing pump

In the *Info* menu item, you can find a wide range of information about your dosing pump.

1. Press Menu.
2. Use the ↑ or ↓ key to choose the *Info* menu item and press OK.
   ▶ The dosing pump displays menu 7.1 *Info 1*.

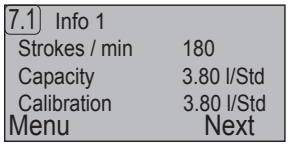

Fig. 35: Display of menu Info 1

3. Keep pressing Continue to get to subsequent *Info* menus.

The Info menus display the following information:

Menu	Information
Info 1	■ Maximum strokes/minute ■ Maximum delivery capacity in l/hr ■ Calibrated delivery capacity in l/hr
Info 2	■ Stroke volume at factory setting in ml ■ Stroke volume after calibration in ml
Info 3	■ Running time of the dosing pump in hrs. ■ Total strokes of the dosing pump carried out
Info 4	■ Software version and date of updating ■ Part number ■ Serial number
Info 5 (only LP)	■ Current value in mA at analogue input ■ Date and time
Info 6 (only LP-Net)	■ MAC number ■ IP number
Info 7	Assignment of connection socket 1
Info 8	Assignment of connection socket 2
Info 9	Assignment of connection sockets 2 and 3
Info 10	Assignment of connection socket 4
Info 11 (only LP)	Assignment of connection socket 5

Table 37: Explanation of the Info menus

4. Press Menu to exit the *Info* menu.

10.8 Messages of the control (only LP)

The system logs the disturbance messages of the dosing pump with the date, time and error code.

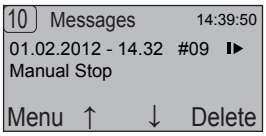

Fig. 36: Display of disturbance messages

The following symbols are used:

Symbol	Meaning
!	Symbol for an event
I▶	Symbol for the start of a message
▶I	Symbol for the end of a message

Table 38: Explanation of the menu icons - disturbance messages

1. Press Menu.
2. Use the ↑ or ↓ key to choose the *Messages* menu item and press OK.
3. Keep pressing ↑ or ↓ to display the distubance messages that are listed in chronological order.
4. Press Menu to exit the *Messages* menu.

Deleting the messages of the control unit

1. Press Menu.
2. Use the ↑ or ↓ key to choose the *Messages* menu item and press OK.
3. Press Back.
4. Press Back.

✓ **The messages of the control unit are deleted**

© Lutz-Jesco GmbH 2020

11 Operation

WARNING

Caustic burns or other burns through dosing media!

After connecting the mains supply, residual dosing media in the dosing head can spray out.

⇨ Before connecting the mains supply, connect the dosing lines.

⇨ Check that all the screw connections have been tightened correctly and are leak-proof.

CAUTION

Danger of automatic start up!

The dosing pump does not have an ON/OFF switch and may start to pump as soon as it is connected to the mains supply. This means that dosing medium can escape. Depending on the type and hazardousness of the dosing medium, this can result in injury.

⇨ Stop the dosing pump before disconnecting it from the mains supply.

⇨ Ensure that the dosing pump has been installed correctly before connecting it to the mains supply.

11.1 Commissioning the dosing pump

Precondition for action:

✓ The dosing pump was fitted and installed in accordance with the sections “Fitting the dosing pump”, “Hydraulic installation” and “Electrical installation”.

✓ All the mechanical fastenings have been inspected to ensure adequate load-bearing capacity.

✓ The dosing head screws have been tightened with the correct torque.

✓ All the hydraulic sections have been inspected to ensure they are adequately leak-proof and that the through flow direction is correct.

✓ The dosing pump was setup in accordance with the section 10.4 „Menu settings at initial commissioning“ on page 27.

For initial commissioning, it is advisable to use water as the dosing medium to check that the system is leak-proof and that the dosing pump is functioning correctly. Check first whether undesirable reactions could occur between the actual dosing medium and the water.

Perform the following working steps:

1. Open the shut-off valves on the suction and discharge sides if present.
2. Plug in the dosing pump's mains plug to the power supply.
3. If the dosing head is fitted with a vent screw, vent the dosing pump (see section 11.1.1 „Venting the dosing pump“ on page 33).
4. Scale the delivery capacity of the dosing pump, if necessary (see chapter 11.1.2 „Scaling the delivery capacity“ on page 34).
5. Calibrate the dosing pump (see chapter 11.1.3 „Calibrating the dosing pump“ on page 34).
6. Select an operating mode and start the dosing pump in accordance with the instructions in the chapter 11.2 „Operating modes“ on page 35.

▶ The dosing pump primes. If it does not prime enough, use a priming aid (see chapter 8.7.7 „Priming aid“ on page 21).

At initial commissioning, it is advisable to prime the pump without backpressure. For this purpose, we recommend installing a relief valve on the discharge side of the dosing pump.

✓ **The dosing pump is commissioned.**

11.1.1 Venting the dosing pump

Plastic dosing heads are fitted with a vent screw. Gas bubbles can be removed from the dosing head using vent screws, in order to improve the performance of the pump. Whether venting is helpful depends on the dosing medium and the size of the pump.

CAUTION

Danger of personal injury and material damage!

Dosing medium can escape if you loosen connections on the dosing head (e.g. for venting) during operation.

⇨ Use sufficient personal protective equipment.

⇨ Follow the safety data sheet of the dosing medium.

⇨ Clean the dosing pump if dosing medium escapes.

⇨ Dispose of the dosing medium correctly.

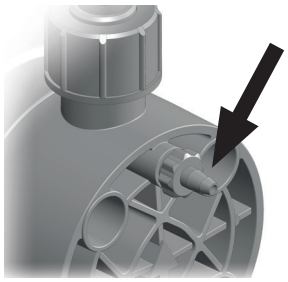

Fig. 37: Dosing head venting facility with vent screw

Precondition for action:

✓ The dosing head venting facility connected has been connected in accordance with the chapter 8.6 „Connecting the dosing head venting facility“ on page 19.

© Lutz-Jesco GmbH 2020
Subject to technical changes.
201221

Perform the following working steps:

1. Open the vent screw by one complete turn (looking onto the dosing head, anti-clockwise).
2. Press `Menu`.
3. Use the ↑ or ↓ key to choose the *Venting* menu item and press `OK`.
4. Press and hold the `Start` key.
   ▶ The dosing pump starts delivery at the highest stroke frequency.
5. Release `Start` key as soon as there is a continuous throughflow from the dosing head venting facility with no air bubbles.
   ▶ The dosing pump stops delivery.
6. Close the vent screw.

✓ **The dosing pump is vented.**

> ℹ If you are using strongly effervescent dosing media, allow them to flow out continuously. Open the vent screw such that about one drop per 1 – 3 strokes escapes, then close the discharge.

11.1.2 Scaling the delivery capacity

You can use the *Scaling* function to adjust the dosing pump flexibly to the local conditions during the start-up. Sometimes, a dosing pump model selected during the planning phase turns out to be too big. To minimise the risk of overdosing, the delivery capacity can be limited or scaled.

The reduced delivery capacity applies to all operating modes of the dosing pump. The setting is retained even after an interruption to the power supply. If the dosing pump has been calibrated, the percentually limited delivery capacity is restricted to the actual output.

Perform the following working steps:

1. Press `Menu`.
2. Use the ↑ or ↓ key to choose the *Scaling* menu item and press `OK`.
3. Use the `+` and `-` buttons to set the desired delivery capacity in l/h and press `OK`.
   ▶ The bar that indicates delivery capacity is now displayed in two parts.

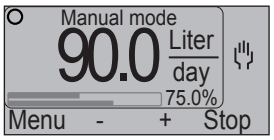

Fig. 38: Display with scaled delivery capacity

The meaning of the bars is as follows:

Bar	Meaning
top	The scaled delivery capacity value (part of the delivery capacity in the factory setting)
bottom	The current delivery capacity expressed as a percentage of the scaled delivery capacity

✓ **Delivery capacity scaled.**

> ℹ To reverse scaling, set the delivery capacity in the *Scaling* menu to the value 0 or to the maximum possible value.

11.1.3 Calibrating the dosing pump

In dependence on the dosing medium you are using and the existing delivery pressure, you must match the theoretical delivery capacity with that which is actually measured. You use the *Calibration* function to do this.

Precondition for action:

✓ The plant sections on the discharge side of the dosing pump have been installed correctly and are ready for operation.

Perform the following working steps:

1. Fill the metering container with the dosing medium.
2. Hold the end of the dosing pump's suction line in the metering container.
3. Vent the dosing pump.
4. Press `Menu`.
5. Use the ↑ or ↓ key to choose the *Calibration* menu item and press `OK`.
   ▶ The dosing pump displays menu 5 *Calibration*.

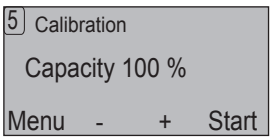

Fig. 39: Menu 5 Calibration

6. Use the `+` and `-` keys to set the percentage value of the delivery capacity with which you want to carry out calibration. Setting range 10 % – 100 %.
7. Press `Start`.
   ▶ The dosing pump starts delivery and displays the number of executed strokes.
8. Press `Finish` as soon as you have achieved a measurable value in the metering container.
   ▶ The dosing pump stops and displays the theoretical value of the delivery rate in ml.

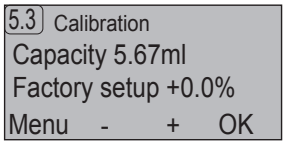

Fig. 40: Menu 5.3 Calibration

9. Read off the actual delivery rate from the metering container and use the `+` and `-` keys to correct the displayed delivery capacity. Adjustment range: -50 % – +100 %
10. Press `OK`.

✓ **The dosing pump is calibrated.**

© Lutz-Jesco GmbH 2020

11.2 Operating modes

The dosing pump offers the following operating modes:

- *Manual operation* - Manual setting of the delivery capacity,
- *Pulse input* - Controlling the stroke frequency and number of strokes in dependence on the number of pulses and the pulse spacing,
- *Batch mode* - Controlling the delivery capacity and output via manual start, an external pulse or intervals.

Only MEMDOS SMART LP:

- *Analog input* - Controlling the delivery capacity by means of a 0/4 - 20 mA signal,
- *Batch mode* - at pre-determined points.
- *Network mode* (only MEMDOS SMART LP-Net) - Controlling the stroke frequency and number of strokes across a network.

11.2.1 Manual mode

11.2.1.1 Selecting the operating mode

1. Press `Menu`.
2. Use the ↑ or ↓ key to choose the *Operating mode* menu item and press `OK`.
3. Use the ↑ or ↓ key to choose the *Manual operation* menu item and press `OK`.
   ▶ The dosing pump displays the start screen of *Manual operation* mode.

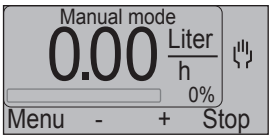

Fig. 41: Start screen of Manual operation

11.2.1.2 Starting the dosing pump

1. Press the `+` key to increase the stroke frequency by 0.1 %.
   ▶ The dosing pumps starts dosing immediately. The system automatically calculates the resulting delivery capacity and displays it.
2. Use the `+` and `-` keys to set the desired stroke frequency.

✓ **Dosing pump has started.**

11.2.1.3 Stopping the dosing pump

➔ Press `Stop`.
▶ The system displays the "Stop" signal and `Stop` changes to `Start`. Press `Start` to restart the dosing pump.

✓ **Dosing pump has stopped.**

> Pressing `Menu` does not interrupt dosing!
> You do not stop the dosing pump until you change to a different operating mode using the menu.

11.2.2 Pulse input

In *Pulse input* mode, the frequency and number of strokes issued by the dosing pump is controlled in dependence on the number of and clearance between the pulses of the signal applied at the pulse input (see section 9.2.2.2 „Pulse input“ on page 23).

11.2.2.1 Selecting the operating mode

1. Press `Menu`.
2. Use the ↑ or ↓ key to choose the *Operating mode* menu item and press `OK`.
3. Use ↑ or ↓ to select the menu item *Pulse input* and press `OK`.
   ▶ The dosing pump displays the current configuration of this operating mode's parameters (Menu 3.31).

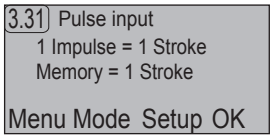

Fig. 42: Parameters of the operating mode

4. Press `OK`.
   ▶ The dosing pump displays the start screen of *Pulse input* mode.

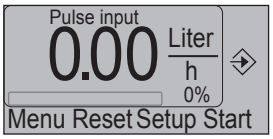

Fig. 43: Start screen of Pulse input

11.2.2.2 Choose the type

You can choose from the following modes in *Pulse input* operating mode:

Type	Explanation
Strokes	Transmission and reduction of the number of pulses compared to the number of strokes
Output	Delivery of a fixed output per pulse
Water meter	Operation on a contact-type water meter

Table 39: Explanation of pulse input modes

> The system marks the currently active mode by displaying *(On)* after the menu item. In the factory default setting, the *Strokes* mode is preselected: *Strokes (On)*.

1. Press `Setup`.
   ▶ The dosing pump displays the current configuration of this operating mode's parameters (Menu 3.31).
2. Press `Mode`.
3. Use ↑ or ↓ to select a type and press `OK`.
   ▶ The dosing pump displays the current configuration of this operating mode's parameters (Menu 3.31).
4. Press `OK`.
   ▶ The dosing pump displays the start screen of *Pulse input* mode.

© Lutz-Jesco GmbH 2020
Subject to technical changes.
201221

11.2.2.3 Pulse input modes

The parameters that you can set are different depending on the mode.

Strokes

The *Strokes* pulse input mode offers the following configuration options:

Parameter	Explanation
Strokes p. pulse	Specifies the required number of strokes that the dosing pump carries out per pulse. in this connection, the system determines the stroke frequency on a dynamic basis based on the time between the last two pulses. Stroke frequency = number of strokes/pulse spacing Default settings: 1 stroke Adjustment range: 1 - 999 strokes
Pulses p. stroke	Specifies the required number of pulses that must be connected to the input to trigger a stroke. Default setting: 1 pulse Adjustment range: 1 – 999 impulses
Stroke buffer	The strokes that have still to be executed are saved in the stroke buffer. If stroke multiplication is set, the system writes all the strokes belonging to one pulse into the stroke buffer. With each pulse, the number of strokes in the accumulator increases; with each executed stroke, it decreases. The limit of the stroke buffer must be raised to save pulse requests that arrive during execution of the strokes from the previous pulse request. If the number of requested strokes exceeds the stroke buffer capacity, the system issues a "Stroke buffer maximum" message. Default setting: 1 stroke Adjustment range: 1 - 999 strokes

Table 40: Strokes configuration type

> In the case of pulse multiplication, you must increment the stroke buffer manually. Otherwise, you can confirm the configuration by pressing OK.

You can configure parameters *Strokes per pulse* and *Pulses per stroke* at the same time to define an exact number of strokes for a number of pulses. in this connection, the system determines the stroke frequency on a dynamic basis based on the time between the last two pulses.

Example:

If you set "7 strokes per pulse and 3 pulses per stroke , the dosing pump carries out 7 strokes per 3 input pulses.

Output

The *Output* pulse input mode offers the following configuration options:

Parameter	Explanation
Output	Specifies the required output per pulse in ml. The output is calculated from the dosing pump's stroke volume after calibration and the automatically calculated ratio of the number of strokes to the number of pulses. The value that is displayed in brackets indicates the number of strokes and pulses (number of strokes/number of pulses).
Stroke buffer	See "Stroke buffer" mode under „Strokes“ on page 36.

Table 41: Output configuration mode

> The delivery capacity depends on the dosing pump's delivery pressure. To display the delivery capacity correctly, you must calibrate the dosing pump.

Water meter

The *Water meter* pulse input mode offers the following configuration options:

Parameter	Explanation
Output	You can specify the delivery rate per pulse in Litres (ml), parts per million (ppm) and per cent (%). You can set the value after selecting the unit. Specifies the delivered output of the dosing pump per cubic metre (m^3) throughflow of the water meter in ml. The value corresponds to the throughflow amount per pulse. Since the dosing pump only controls the output via the stroke frequency, you must set the cycle between the water meter pulse and the dosing pump's stroke. The value that is displayed in brackets indicates the number of strokes that must be triggered per number of water meter pulses. (Number of strokes/number of pulses). Default setting: Per cent
Stroke buffer	See "Stroke buffer" mode under „Strokes“ on page 36.
ml/pulse	Specifies the water meter's throughflow amount per pulse in ml. Factory setting 100 ml/impulse
l/pulse	Specifies the water meter's throughflow amount per pulse in l.
m^3/pulse	Specifies the water meter's throughflow amount per pulse in m^3.
Maximum	Specifies the water meter's maximum throughflow amount in m^3/hr. Default setting: 0,2 m^3 / hr

Table 42: Water meter configuration mode

© Lutz-Jesco GmbH 2020

Parameter	Explanation
Concentration	Determines the concentration of the dosing medium. This specification is required for the delivery according to ppm and perc. Default setting: 100%
Duration	Continuous operation or dosing controlled via the water meter. Default setting: On
Charge	Batch dosing controlled via the water meter.

Table 42: Water meter configuration mode

> The parameters *Duration* and *Batch* are only displayed if the delivery rate is specified in ppm or per cent.

On the basis of the water meter's values (*ml/pulse*, *l/pulse* or *m³/pulse*) and the delivered dosing capacity (output) , the dosing pump automatically determines the stroke frequency. If the dosing pump's maximum output is exceeded during a fast sequence of pulses, the system issues a warning message.

> If you enter contradictory parameters, the system displays this when you try to save them (Menu 3.41). It is not possible to activate the operating mode without correcting the parameters.

11.2.2.4 Configuring the pulse input mode

1. Press `Setup`.
   - The dosing pump displays the current configuration of this operating mode's parameters (Menu 3.31).
2. Press `Setup`.
3. Use the ↑ or ↓ key to choose a parameter of the mode and press `OK`.
4. Press the `+` key to increment the parameter's value or the `-` key to decrement it.
5. Press `OK`.
   - The dosing pump displays the current configuration of this operating mode's parameters (Menu 3.31).
6. Press `OK`.
   - The dosing pump displays the start screen of *Pulse input* mode.

11.2.2.5 Starting the dosing pump

Precondition for action:

✓ The dosing pump has been connected in accordance with the chapter 9.2.2.2 „Pulse input" on page 23.

1. Press `Start`.
2. Supply a pulse to the pulse input of the dosing pump.
   - The dosing pumps starts dosing immediately. The system automatically calculates the resulting delivery capacity and displays it.

✓ **Dosing pump has started.**

11.2.2.6 Stopping the dosing pump

➔ Press `Stop`.

✓ **Dosing pump has stopped.**

11.2.2.7 Clearing the stroke buffer

➔ Press `Reset`.

- All the strokes in the accumulator that are still pending are deleted. The dosing pump stops; however, it is still active and waiting for the next pulse.

✓ **The stroke buffer has been cleared.**

11.2.3 Analogue input (only LP)

In *Analog input* operating mode, an external 0/4 - 20 mA signal, which is connected to the analogue input (see chapter "Connection socket 2" on page 23) controls the stroke frequency.

11.2.3.1 Selecting the operating mode

1. Press `Menu`.
2. Use the ↑ or ↓ key to choose the *Operating mode* menu item and press `OK`.
3. Use the ↑ or ↓ key to choose the *Analog input* menu item and press `OK`.
   - The dosing pump displays the current configuration of this operating mode's parameters (Menu 3.21).

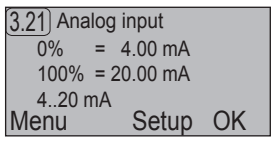

Fig. 44: Parameters of the operating mode

4. Press `OK`.
   - The dosing pump displays the start screen of *Analog input* mode.

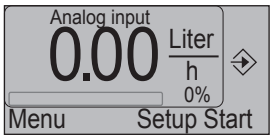

Fig. 45: Start screen of Analog input

11.2.3.2 Setting the signal mode

You have the option of setting a 0 - 20 mA signal or a 4 - 20 mA one.

1. Press `Setup`.
   - The dosing pump displays the current configuration of this operating mode's parameters (Menu 3.21).
2. Press `Setup`.
3. Use the ↑ or ↓ key to choose the *0/4 … 20 mA* menu item and press `Setup`.
4. Press `Mode` to set 0 - 20 mA or 4 - 20 mA.
5. Press `OK`.
   - The dosing pump displays the current configuration of this operating mode's parameters (Menu 3.21).

© Lutz-Jesco GmbH 2020
Subject to technical changes.
201221

6. Press OK.
   ▶ The dosing pump displays the start screen of *Analog input* mode.

✓ **The signal mode is set.**

11.2.3.3 Setting the current value for 0 % delivery capacity

1. Press Setup.
   ▶ The dosing pump displays the current configuration of this operating mode's parameters (Menu 3.21).
2. Press Setup.
3. Use the ↑ or ↓ key to choose the *0% current* menu item and press Setup.
4. Use the + and - keys to set the desired current value. Admissible values are in the range 0.00 - 20.00 mA. The value that is displayed in brackets indicates the actual connected current value.
5. Press OK.
   ▶ The dosing pump displays the current configuration of this operating mode's parameters (Menu 3.21).
6. Press OK.
   ▶ The dosing pump displays the start screen of *Analog input* mode.

✓ **The current value for 0 % delivery capacity is set.**

11.2.3.4 Setting the current value for 100 % delivery capacity

1. Press Setup.
   ▶ The dosing pump displays the current configuration of this operating mode's parameters (Menu 3.21).
2. Press Setup.
3. Use the ↑ or ↓ key to choose the *100% current* menu item and press Setup.
4. Use the + and - keys to set the desired current value. Admissible values are in the range 0.00 - 20.00 mA. The value that is displayed in brackets indicates the actual connected current value.
5. Press OK.
   ▶ The dosing pump displays the current configuration of this operating mode's parameters (Menu 3.21).
6. Press OK.
   ▶ The dosing pump displays the start screen of *Analog input* mode.

> ℹ To process a 20 – 4 mA (inverted) analogue signal, the parameter *0% current* must be configured to 20 mA and the parameter *100% current* must be configured to 4 mA.

✓ **The current value for 100 % delivery capacity is set.**

11.2.3.5 Starting the dosing pump

Precondition for action:

✓ The dosing pump has been connected in accordance with the chapter 9.2.2.1 „Analogue input (only LP)“ on page 23.

1. Press Start.
2. Apply a 0 – 20 mA or a 4 – 20 mA signal to the dosing pump's analog input.
   ▶ The dosing pumps starts dosing immediately. The system automatically calculates the resulting delivery capacity and displays it.

✓ **Dosing pump has started.**

11.2.3.6 Stopping the dosing pump

➔ Press Stop or reduce the incoming signal to the value for *0% current* or less.

> ℹ If the signal value is below 4 mA with a 4 – 20 mA signal, an the error message “Analogue input error” will be displayed.

✓ **Dosing pump has stopped.**

11.2.4 Batch mode

In *Batch mode*, the system regulates the dosing pump's stroke frequency and the number of strokes in dependence on the delivered output. You can set the output on an individual basis for the dosing pump's run time, number of strokes and delivery capacity (stroke frequency),

It is started either manually or via a pulse signal applied at the pulse input.

Dosing is possible at intervals or at specified times in the course of a week.

11.2.4.1 Selecting the operating mode

1. Press Menu.
2. Use the ↑ or ↓ key to choose the *Operating mode* menu item and press OK.
3. Use the ↑ or ↓ key to choose the *Batch mode* menu item and press OK.
   ▶ The dosing pump displays the current configuration of this operating mode's parameters (Menu 3.41).

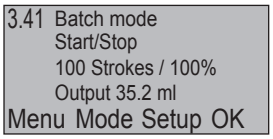

Fig. 46: Parameters of the operating mode

4. Press OK.
   ▶ The dosing pump displays the start screen of *Batch mode*.

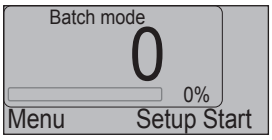

Fig. 47: Start screen of Batch mode

© Lutz-Jesco GmbH 2020

11.2.4.2 Choosing the batch mode mode

You can choose from the following modes in *Batch mode*:

Type	Explanation
Start/Stop	Manual starting of dosing
Ext Start	External starting of dosing
Interval	Automatic starting of dosing at regular intervals
Timer (only LP)	Starting of dosing at a specific time

Table 43: Explanation of batch mode modes

> The system marks the currently active mode by displaying *(On)* after the menu item. In the factory default setting, the *Start/Stop* mode is preselected: *Start/Stop (On)*.

1. Press `Setup`.
   - The dosing pump displays the current configuration of this operating mode's parameters (Menu 3.41).
2. Press `Mode`.
3. Use ↑ or ↓ to select a type and press `OK`.
   - The dosing pump displays the current configuration of this operating mode's parameters (Menu 3.41).
4. Press `OK`.
   - The dosing pump displays the start screen of *Batch mode*.

11.2.4.3 Batch mode modes

The parameters that you can set are different depending on the mode.

Start/Stop and Ext Start

Batch mode types *Start/Stop* and *Ext. Start* do not differ by virtue of the configuration; rather, the only difference is in the way in which that the dosing pump is started (see). They offer the following configuration options:

Parameter	Explanation
Runtime	Specifies the required runtime of the dosing pump; input in minutes. The value that is displayed in brackets indicates the calculated output.
No. of strokes	Specifies the number of required strokes. The value that is displayed in brackets indicates the calculated output.
Capacity	Set the required stroke frequency,stipulated in per cent of the max. stroke frequency (see section 5.1 “Delivery capacity data” on page 41).

Table 44: Start/Stop and Ext. Start configuration

Interval

The *Interval* batch mode mode offers the following configuration options:

Parameter	Explanation
Runtime	Specifies the required runtime of the dosing pump; input in minutes. The value that is displayed in brackets indicates the calculated output.
No. of strokes	Specifies the number of required strokes. The value that is displayed in brackets indicates the calculated output.
Capacity	Specifies the required stroke frequency stated as a percentageof the maximum stroke frequency.
Interval	Specifies the interval at which dosing is to take place on a regular basis. The interval cannot be shorter than the specified or calculated runtime; if necessary, the system corrects it automatically to the minimum value.

Table 45: Interval configuration mode

The system displays the *Interval* with a clock icon and the time elapsing until the start of next dosing.

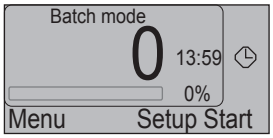

Fig. 48: Start screen of Interval batch mode mode

Timer (only LP)

Using the MEMDOS SMART LP dosing pump *Timer* batch mode, you can program two different dosing procedures for a period of one week.

You can provide one or two dosing procedure(s) for each day of the week which start at a specific time (this start time is repeated for each further dosing procedure of the same mode on other days of the week). You can therefore program up to 14 dosing procedures per week. You must specify for each day of the week if no dosing procedure, dosing procedure 1, dosing procedure 2, or both dosing procedures should be started after each other.

Apart from this, you must specify for each dosing procedure whether the dosing pump is to carry out dosing for a specific time or for a specific number of strokes.

You can configure the parameters below for dosing procedure 1:

- *Start time 1*,
- *Runtime 1*,
- *Number of strokes 1*,
- *Delivery capacity* (applies to dosing procedures 1 and 2),
- *Mo-Su*.

You can configure the parameters below for dosing procedure 2:

- *Start time 2*,
- *Run time 2*,
- *Preset strokes 2*,
- *Delivery capacity* (applies to dosing procedures 1 and 2),
- *Mo-Su*.

© Lutz-Jesco GmbH 2020
Subject to technical changes.
201221

> You must set the date, time and day of the week before configuring the parameters. To this end, see page 31.

The *Timer* batch mode mode offers the following configuration options:

Parameter	Explanation
Start time 1	Specifies the required time for dosing procedure 1.
Start time 2	Specifies the required time for dosing procedure 2.
Runtime 1	Specifies the required run time of dosing procedure 1, stated in minutes. The bracket value in the display shows the calculated delivery rate (based on the setting in the *Delivery capacity* parameter).
Runtime 2	Specifies the required run time of dosing procedure 2, stated in minutes. The bracket value in the display shows the calculated delivery rate (based on the setting in the *Delivery capacity* parameter).
Preset strokes 1	Specifies the required number of strokes of dosing procedure 1. The value that is displayed in brackets indicates the calculated output.
Preset strokes 2	Specifies the required number of strokes of dosing procedure 2. The value that is displayed in brackets indicates the calculated output.
Capacity	Specifies the required stroke frequency for both dosing procedures stated as a percentage of the maximum stroke frequency .
Mo-Su	Specifies the day of the week on which a specific dosing procedure is to be started.

Table 46: Timer configuration mode

11.2.4.4 Programming the dosing procedures

1. Press `Setup`.
   - The dosing pump displays the current configuration of this operating mode's parameters (Menu 3.41).
2. Press `Setup`.
3. Use the ↑ or ↓ key to choose the *Start time 1* menu item and press `Setup`.
4. Press the + key to increment the parameter's value or the - key to decrement it.
5. Press `OK`.
6. Using ↑ or ↓ select *Runtime 1* or *Strokes 1* and then press `Setup`.
7. Press the + key to increment the parameter's value or the - key to decrement it.
8. Press `OK`.
9. Use the ↑ or ↓ key to choose the *Capacity* menu item and press `Setup`.
10. Press the + key to increment the parameter's value or the - key to decrement it.
11. Press `OK`.
    - The dosing pump displays the current configuration of this operating mode's parameters (Menu 3.41).
12. If required, also program the dosing procedure 2 with the parameters *Start time 2*, *Runtime 2* or *Strokes 2*.
13. Use the ↑ or ↓ key to choose the *Mo-Su* menu item and press `Setup`.
14. Press `Next` to select a weekday.
15. Press `1/2/-` to program the dosing procedures for the selected weekday. The following settings can be made:

Setting	Explanation
1	Dosing procedure 1 will be carried out on the selected weekday.
2	Dosing procedure 2 will be carried out on the selected weekday.
3	Dosing procedures 1 and 2 will be carried out on the selected weekday.
-	No dosing procedure will be carried out on the selected weekday.

> Please note that, if setting *3* is chosen, dosing procedure 1 and dosing procedure 2 must be programmed with a sufficient time gap between them. If one dosing procedure has not finished before the start time of the other one, the first will be interrupted and the other dosing procedure started.

16. Press `OK`.
    - The dosing pump displays the current configuration of this operating mode's parameters (Menu 3.41).

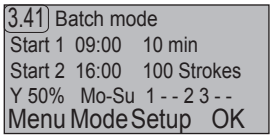

Fig. 49: Configuring the batch mode type Timer

In this example, the dosing procedure 1 starts on Monday and on Friday at 9 o'clock in the morning. Dosing procedure 1 runs for 10 minutes at 50% of the stroke frequency (Y 50%). Dosing procedure 2 starts on Thursday and on Friday at 4 o'clock in the afternoon. Dosing procedure 2 runs for 100 strokes at 50% stroke frequency.

17. Press `OK`.
    - The dosing pump displays the start screen of *Batch mode*.

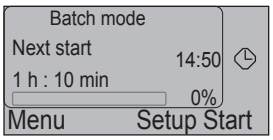

Fig. 50: Start-up display of the batch mode type Timer

© Lutz-Jesco GmbH 2020

The start-up display of the batch mode type *Timer* shows the remaining time until the next start as well as the current time.

✓ **Dosing procedures programmed.**

11.2.4.5 Starting the dosing pump

If batch mode mode *Start/Stop* is set:

1. Press `Start`.
2. Press `Start` again.
   ▸ The dosing pumps starts dosing immediately. The system automatically calculates the resulting delivery capacity and displays it.

✓ **Dosing pump has started.**

If batch mode type *Ext. Start* is set:

1. Press `Start`.
2. Supply a pulse to the pulse input of the dosing pump.
   ▸ The dosing pumps starts dosing immediately. The system automatically calculates the resulting delivery capacity and displays it.

✓ **Dosing pump has started.**

If batch mode mode *Interval* is set:

➔ Press `Start`.
▸ The dosing pump displays the time remaining until the set interval is reached. After the time has expired, the pump starts dosing.

✓ **Dosing pump has started.**

If batch mode mode *Timer* is set:

➔ Press `Start`.
▸ The dosing pump starts dosing when one of the set days of the week and one of the set start times are reached.

✓ **Dosing pump has started.**

11.2.4.6 Stopping the dosing pump

➔ Press `Stop`.

✓ **Dosing pump has stopped.**

11.2.5 Network mode (only MEMDOS SMART LP-Net)

11.2.5.1 Selecting the operating mode

1. Press `Menu`.
2. Use the ↑ or ↓ key to choose the *Operating mode* menu item and press `OK`.
3. Use the ↑ or ↓ key to choose the *Network mode* menu item and press `OK`.
   ▸ The dosing pump displays the start screen of *Network mode*.

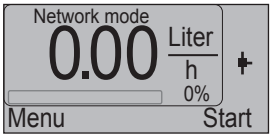

Fig. 51: Start screen of Network mode

In *Network mode*, the signal that is connected to the Ethernet connection controls the dosing pump's stroke frequency and number of strokes. Furthermore, it is also possible to transmit all error and status messages in the opposite direction.

You do not need to make any further configurations in the operating mode.

You must, however, enter or check the IP address (see section 10.6.11 „Set “IP address” menu item (-Net only)“ on page 31).

The dosing pump has a globally unique MAC number for unambiguous identification (for example: 00-C0-3D-00-27-8B) To uniquely identify the dosing pump on a TCP/IP network, it must be given an IP number (for example: "169.254.55.114"). The local network administrator assigns the IP number. There is no DHCP function to automatically assign numbers.

If you operate several dosing pumps on one network, their IP addresses must be matched with each other to differentiate them and to make possible unique addressing.

TCP/IP packets must conform with the Modbus TCP/IP protocol; this means that they can be sent from and received by the TOPAX DX Net multi-channel controller, by an Ethernet-capable PLC or a PC control console.

You can only operate the dosing pump in a local TCP/IP network (not via a gateway).

The dosing pump monitors the network connection. If packets fail, the dosing pump automatically stops delivery. This means that the PLC or the PC control console must continuously trigger the dosing pump in an interval of less that one second.

A Web server is integrated in the dosing pump. To check the network connection, you can surf to the Web server from a PC with a Web browser and read out the current delivery capacity. Addressing is by means of the IP address.

11.3 External On / Off via Release input

Regardless of the selected operating mode, you can start or stop the dosing pump by means of the closed switching contact on the Release input.

© Lutz-Jesco GmbH 2020
Subject to technical changes.
201221

If you set the function , the system displays in the selected operating mode the symbol for configuration of the Release input.

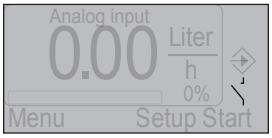

Fig. 52: Start screen of Analog input with icon for open contact

11.3.1 Starting the dosing pump

If *Run = contact* is set:

➔ Close the switching contact on the Release input.

✓ **Dosing pump has started.**

If *Run = open* is set:

➔ Open the switching contact on the Release input.

✓ **Dosing pump has started.**

11.3.2 Stopping the dosing pump

If *Run = contact* is set:

➔ Open the switching contact on the Release input.

✓ **Dosing pump has stopped.**

If *Run = open* is set:

➔ Close the switching contact on the Release input.

✓ **Dosing pump has stopped.**

11.4 Decommissioning the dosing pump

Perform the following working steps:

1. Stop the dosing pump in accordance with the selected operating mode.
2. Unplug the dosing pump's mains plug from the power supply.
3. Disconnect all electrical connections.
4. Depressurize all the hydraulic parts in the system.
5. Unplug all the hydraulic connections on the dosing pump.
6. Empty the dosing head.
7. Remove any residual dosing medium from the dosing head by flushing the system with a washing agent. Ensure that the washing agent is compatible with the dosing medium.

✓ **Dosing pump is decommissioned.**

11.5 Shutting down in an emergency

- In an emergency, you must immediately disconnect the dosing pump from the mains supply or activate the Emergency Stop switch installed in the system.
- Depending on the type of incident, you must depressurized the hydraulic connections or locked to prevent dosing medium from escaping.
- You must follow the safety data sheet of the dosing medium.

11.6 Storage

Storing the dosing pump correctly extends its service life. You should avoid negative influences such as extreme temperatures, high humidity, dust, chemicals, etc.

Ensure ideal storage conditions where possible:

- The storage place must be cold, dry, dust-free and generously ventilated,
- Temperatures between + 2 °C and + 40 °C (for PP and PVDF dosing heads, between + 2 °C and + 60 °C),
- Relative air humidity must not exceed 90 %.

11.7 Transportation

Perform the following working steps:

- The unit should be thoroughly cleaned. Any dangerous dosing media must be additionally neutralised and decontaminated.
- All accessories should be dismantled.
- All openings should be closed, so that no foreign objects can get into the system.
- The dosing pump must be suitably packed, preferably in the original packing, for transportation.

If the device is sent back to the manufacturer, please follow chapters 17 „Declaration of no objection“ on page 50 and 18 „Warranty claim“ on page 51.

11.8 Disposal of old equipment

- The waste unit must be thoroughly cleaned. Any dangerous dosing media must be additionally neutralised and decontaminated.
- Any residual dosing media must be removed in a professional manner.
- The dosing pump must be disposed of in accordance with applicable local laws and regulations. The device does not belong to household waste!
- As the disposal regulations may differ from country to country in the European Union, please consult your supplier if necessary.
  In Germany, the manufacturer must provide free-of-charge disposal provided the unit has been sent in a safe manner.

© Lutz-Jesco GmbH 2020

12 Maintenance

Dosing pumps by Lutz-Jesco are manufactured to the highest quality standards and have a long service life. Nevertheless, some of their parts are subject to wear due to operation (e.g. diaphragms, valve seats, valve balls). This means that regular visual inspections are necessary to ensure a long operating life. Regular maintenance will protect the dosing pump from operation interruptions.

DANGER

Mortal danger from electric shock!

Live parts can inflict fatal injuries.

⇨ Before carrying out any maintenance work, always disconnect the dosing pump from the power supply.

⇨ Secure the dosing pump from accidental power-up.

WARNING

Caustic burns or other burns through dosing media!

While working on the dosing head, valves and connections, you may come into contact with dosing media.

⇨ Use sufficient personal protective equipment.

⇨ Rinse the dosing pump with a medium (e.g. water) which does not pose any risk.

⇨ Release pressure in hydraulic parts.

⇨ Never look into open ends of plugged pipelines and valves.

WARNING

Caustic burns or other burns through dosing media!

After connecting the mains supply, residual dosing media in the dosing head can spray out.

⇨ Before connecting the mains supply, connect the dosing lines.

⇨ Check that all the screw connections have been tightened correctly and are leak-proof.

CAUTION

Danger of personal injury and material damage!

The dosing pump can generate a pressure that is many times the rated one. The dosing medium can escape in the case of material failure or wear on the dosing head, the connection pipe or the seals that are used.

⇨ Carry out maintenance work at the recommended intervals.

12.1 Maintenance intervals

This table gives you an overview of maintenance work and the intervals at which you must carry it out. The next few sections contain instructions for carrying out this work.

Maintenance work to be carried out	Frequency
Check that piping is seated firmly	Regularly
Check that suction and discharge valves are seated firmly	Regularly
Clean suction and discharge valves	Regularly
Check that electrical connections are not damaged	Regularly
Tighten up dosing head bolts	■ Regularly ■ Before initial commis-sioning ■ After each diaphragm change
Check diaphragm for leakage due to rupture	Regularly (as long as no leak monitoring system is installed)
Check that the installed accessories are functioning correctly	Regularly
Check the dosing pump for unusual noises during operation, unusual temperatures or smells	Regularly
Replace parts that are subject to wear (diaphragms, valves, seals, etc.)	When unacceptable levels of wear are detected
Rinse out and clean the dosing pump	■ Before changing diaphragms ■ Before taking out of service for a long period of time ■ After feeding aggres-sive, sticky, crystallising or contaminated liquids

Table 47: Maintenance information and maintenance intervals

12.2 Tighten up dosing head bolts

➔ Tighten the dosing head bolts in diagonally opposite sequence with a torque wrench.

The necessary torque is 180 Ncm.

© Lutz-Jesco GmbH 2020
Subject to technical changes.
201221

12.3 Change the diaphragm

The dosing pump has automatic diaphragm change program which simplifies replacing diaphragms.

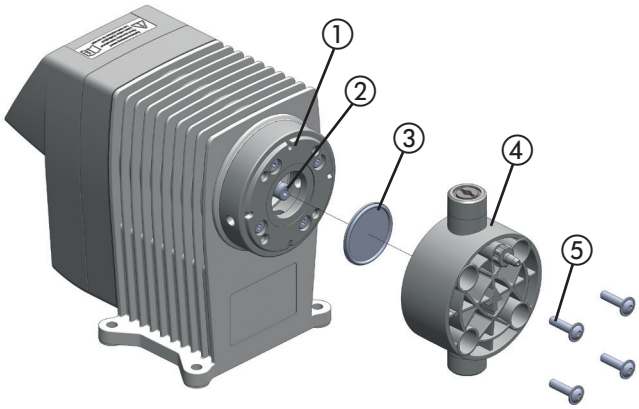

Fig. 53: Exploded view of the diaphragm and dosing head

12.3.1 Remove the old diaphragm

Precondition for action:

✓ You have disconnected the dosing pump from the mains supply.

✓ You have depressurised the hydraulic sections of the plant.

✓ You have rinsed the dosing pump using a safe medium (e.g. water).

Perform the following working steps:

1. Screw out the four screws (5) on the dosing head using a suitable tool (SW 3 Allen key) and take off the dosing head (4).
2. Press `Menu`.
3. Use the ↑ or ↓ key to choose the *Diaphragm change* menu item and press `OK`.
4. Press `Start`.
   ▶ The diaphragm travels to the front end position. The message "Please wait!" is displayed.
5. Wait until the message "Change!" is displayed.
6. Use pliers to bend the edge of the diaphragm (3) slightly upwards and screw it out counter-clockwise.

12.3.2 Install a new diaphragm

Precondition for action:

✓ You have thoroughly cleaned the diaphragm rod (2) and the diaphragm flange (1) so that the new diaphragm is not affected by dosing medium residues.

✓ The diaphragm (3) thread was lightly greased (e.g. Molycote Longterm W2).

1. Screw the diaphragm manually in the clockwise direction until it safely contacts into the diaphragm rod.
2. Bring the dosing head into position and insert the screws. First tighten the screws finger-tight. After this, tighten the bolts on the diagonal, e.g. top left – bottom right – top right – bottom left.

NOTE

Damage to the dosing head/diaphragm leaks

If you tighten the screws too much, this can lead to the dosing head being damaged. However, not tightening the screws enough leads to the diaphragm being leaky and correct functioning being affected.

⇨ Tighten the screws to a torque of 180 Ncm.

✓ **Diaphragm change finished.**

It may be necessary to gauge the delivery capacity after replacing the diaphragm or other dosing pump spare parts.

12.4 Clean suction and discharge valves

Contaminated valves affect the dosing preceision and this means that you should clean the valves on a regular basis.

With dosing heads made of plastic, when replacing a valve you must replace the complete dosing head.

© Lutz-Jesco GmbH 2020

13 Troubleshooting

See below for information about how to rectify faults on the device or the system. If you cannot eliminate the fault, please consult with the manufacturer on further measures or return the dosing pump for repair.

13.1 Dosing pump not delivering or output too low

Possible cause	Remedy
Wrong type of dosing pump selected	➔ Check the dosing pump's technical data and if necessary select a type with a higher delivery capacity.
Valve leaking or blocked	➔ Clean the valve and vent the dosing pump. ➔ Tighten the screw connections.
Valve installed incorrectly	➔ Reassemble the valve. Ensure that the valve balls are located above the valve seats.
Valve damaged (e.g. valve balls)	➔ Remove the damaged parts or install a new valve.
Suction line is leaking	➔ Seal the leak locations or replace the parts.
Suction line is blocked (e.g. screen in foot valve)	➔ Clean the suction line.
Shut-off valves closed	➔ Open the shut-off valves. Inspect the dosing pump for possible damage.
Suction head too high	➔ Set the dosing pump to feed or reduce the suction head. ➔ Install a priming aid.
Viscosity too high	➔ Possibly reduce the concentration of the dosing medium or increase the temperature. ➔ Install spring-loaded valves. ➔ Increase the pipe diameter.
Current supply interrupted	➔ Reconnect the current supply.
The dosing pump's electrical data does not match that of the mains supply	➔ Check the electrical installation.
System backpressure too high (measured at discharge connection of dosing pump)	➔ Clean blocked injection nozzle. ➔ Install pulsation dampeners to reduce pressure peaks if pipes are too long. ➔ Check function of safety valves.

Table 48: Type of fault: Dosing pump not delivering or output too low

13.2 Dosing pump does not prime

Possible cause	Remedy
Valve leaking or blocked	➔ Clean the valve and vent the dosing pump. ➔ Tighten the screw connections.
Valve installed incorrectly	➔ Reassemble the valve. Ensure that the valve balls are located above the valve seats.
Valve damaged (e.g. valve balls)	➔ Remove the damaged parts or install a new valve.
Suction line is leaking	➔ Seal the leak locations or replace the parts.
Suction line is blocked (e.g. screen in foot valve)	➔ Clean the suction line.
Shut-off valves closed	➔ Open the shut-off valves. Inspect the dosing pump for possible damage.
Suction head too high	➔ Set the dosing pump to feed or reduce the suction head. ➔ Install a priming aid.
Viscosity too high	➔ Possibly reduce the concentration of the dosing medium or increase the temperature. ➔ Install spring-loaded valves. ➔ Increase the pipe diameter.
Current supply interrupted	➔ Reconnect the current supply.
Dry the valves	➔ Dampen the dosing head and the valves. ➔ Vent the dosing head.
Air in the suction line with simultaneous pressure on the discharge valve	➔ Vent the dosing head or the lines.

Table 49: Type of fault: Dosing pump does not prime

© Lutz-Jesco GmbH 2020
Subject to technical changes.
201221

13.3 Delivery rate varies

Possible cause	Remedy
Valve leaking or blocked	➔ Clean the valve and vent the dosing pump. ➔ Tighten the screw connections.
Valve damaged (e.g. valve balls)	➔ Remove the damaged parts or install a new valve.
Suction line is leaking	➔ Seal the leak locations or replace the parts.
Suction line is blocked (e.g. screen in foot valve)	➔ Clean the suction line.
Viscosity too high	➔ Possibly reduce the concentration of the dosing medium or increase the temperature. ➔ Install spring-loaded valves. ➔ Increase the pipe diameter.
The dosing pump's electrical data does not match that of the mains supply	➔ Check the electrical installation.
Suction side pressure too high (pump siphoning)	➔ Install a back-pressure valve in the pressure line.
Pressure peaks due to acceleration with long suction lines	➔ Install a suction pressure regulator.
Imprecise dosing due to changeable positive and negative suction heads.	➔ Install a suction pressure regulator.
System backpressure too high (measured at discharge connection of dosing pump)	➔ Clean blocked injection nozzle. ➔ Install pulsation dampeners to reduce pressure peaks if pipes are too long. ➔ Check function of safety valves.

Table 50: Type of fault: Delivery rate varies

13.4 No stroke movement observed

Possible cause	Remedy
Current supply interrupted	➔ Reconnect the current supply.
The dosing pump's electrical data does not match that of the mains supply	➔ Check the electrical installation.
Pressure peaks due to acceleration with long suction lines	➔ Install a suction pressure regulator.
System backpressure too high (measured at discharge connection of dosing pump)	➔ Clean blocked injection nozzle. ➔ Install pulsation dampeners to reduce pressure peaks if pipes are too long. ➔ Check function of safety valves.

Table 51: Type of fault: No stroke movement observed

13.5 Dosing pump delivery rate too high

Possible cause	Remedy
Suction side pressure too high (pump siphoning)	➔ Install a back-pressure valve in the pressure line.
Pressure peaks due to acceleration with long suction lines	➔ Install a suction pressure regulator.

Table 52: Type of fault: Dosing pump delivery rate too high

13.6 Diaphragm is torn or tears too often

Possible cause	Remedy
Shut-off valves closed	➔ Open the shut-off valves. Inspect the dosing pump for possible damage.
Pressure peaks due to acceleration with long suction lines	➔ Install a suction pressure regulator.
The materials are not suitable for the dosing medium being used	➔ Check the resistance of the materials.
Diaphragm not screwed up to the end stop on the dia-phragm rod	➔ Screw a new diaphragm up to the end stop.
System backpressure too high (measured at discharge connection of dosing pump)	➔ Clean blocked injection nozzle. ➔ Install pulsation dampeners to reduce pressure peaks if pipes are too long. ➔ Check function of safety valves.
Media sediment in dosing head	➔ Clean the dosing head.

Table 53: Type of fault: Diaphragm is torn or tears too often

 © Lutz-Jesco GmbH 2020

14 Spare parts

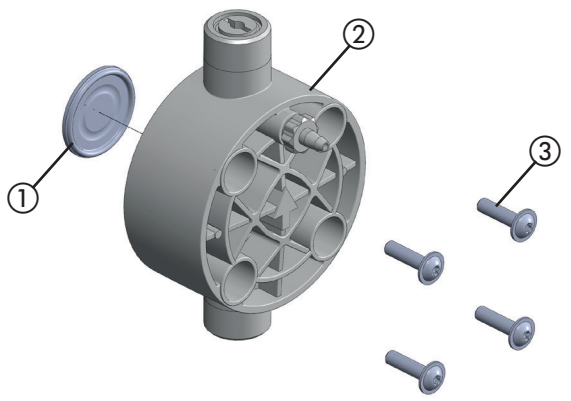

Fig. 54: Spare parts set for MEMDOS SMART LK / LP 2, 5, 10 (plastic dosing head)

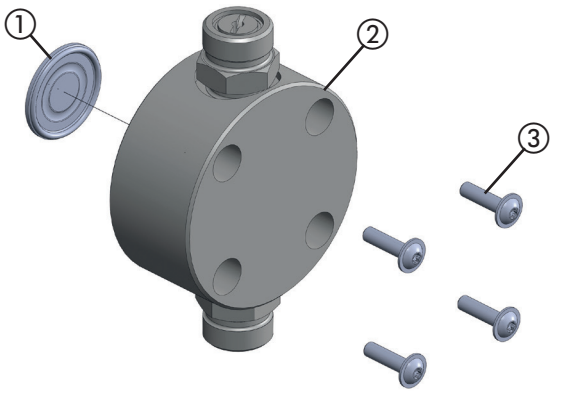

Fig. 55: Spare parts set for MEMDOS SMART LK / LP 2, 5, 10 (stainless steel dosing head (1.4571))

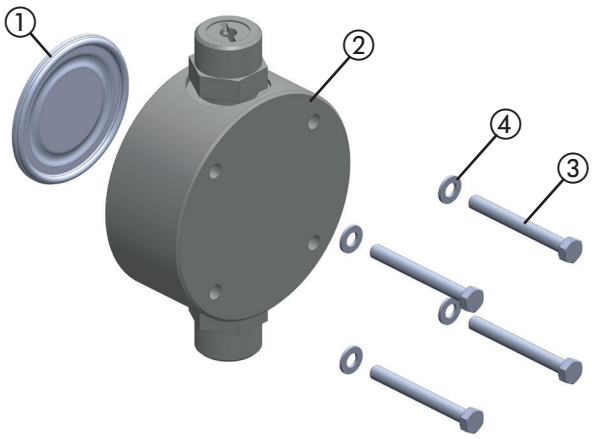

Fig. 56: Spare parts set for MEMDOS SMART LK / LP 15, 20, 30 (plastic or stainless steel dosing head (1.4571))

Required sets for a complete service:

- 1 diaphragm spare parts kit,
- 1 dosing head spare parts set including valves.

14.1 Diaphragm spare parts kits

Diaphragm spare parts set containing:

- 1 diaphragm (item 1).
- 1 set of dosing head screws (item 3),
- 1 set washers (item 4) (only MEMDOS SMART LK / LP 15, 20, 30).

Diaphragm kit	Size	Part No.
	2	39122
	5, 10	39123
	15, 20, 30	40607

14.2 Dosing head spare parts kits including valves

Spare parts set: dosing head including screws consisting of:

- dosing head (item 2),
- valves,
- 1 set of dosing head screws (item 3),
- 1 set washers (item 4) (only MEMDOS SMART LK / LP 15, 20, 30).

PVC	Size	Part No.
Ceramic/PVDF/FPM (ball/seat/seals)	2	41192
	5, 10	38983
	15, 20, 30	40571

PP	Size	Part No.
Ceramic/PVDF/FPM (ball/seat/seals)	2	41193
	5, 10	38980
	15, 20, 30	40572

PVDF	Size	Part No.
PTFE/PVDF/FPM (ball/seat/seals)	2	41194
	5, 10	38986
	15, 20, 30	40573

Stainless steel (1.4571)	Size	Part No.
Stainless steel / stainless steel / FPM (ball/seat/seals)	2	41195
	5, 10	39944
	15, 20, 30	40574

© Lutz-Jesco GmbH 2020
Subject to technical changes.
201221

15 Delivery characteristic curves

This Chapter is intended to give you an idea of the delivery capacity that the dosing pump can achieve at specific back pressures. These delivery capacities were determined on the manufacturer's test stands. They apply at 20 °C (68 °F) for water, at 100 % stroke frequency. The delivery capacity depends on the medium (density and viscosity) and temperature. Since these conditions vary at every installation location, you should calibrate the dosing pump.

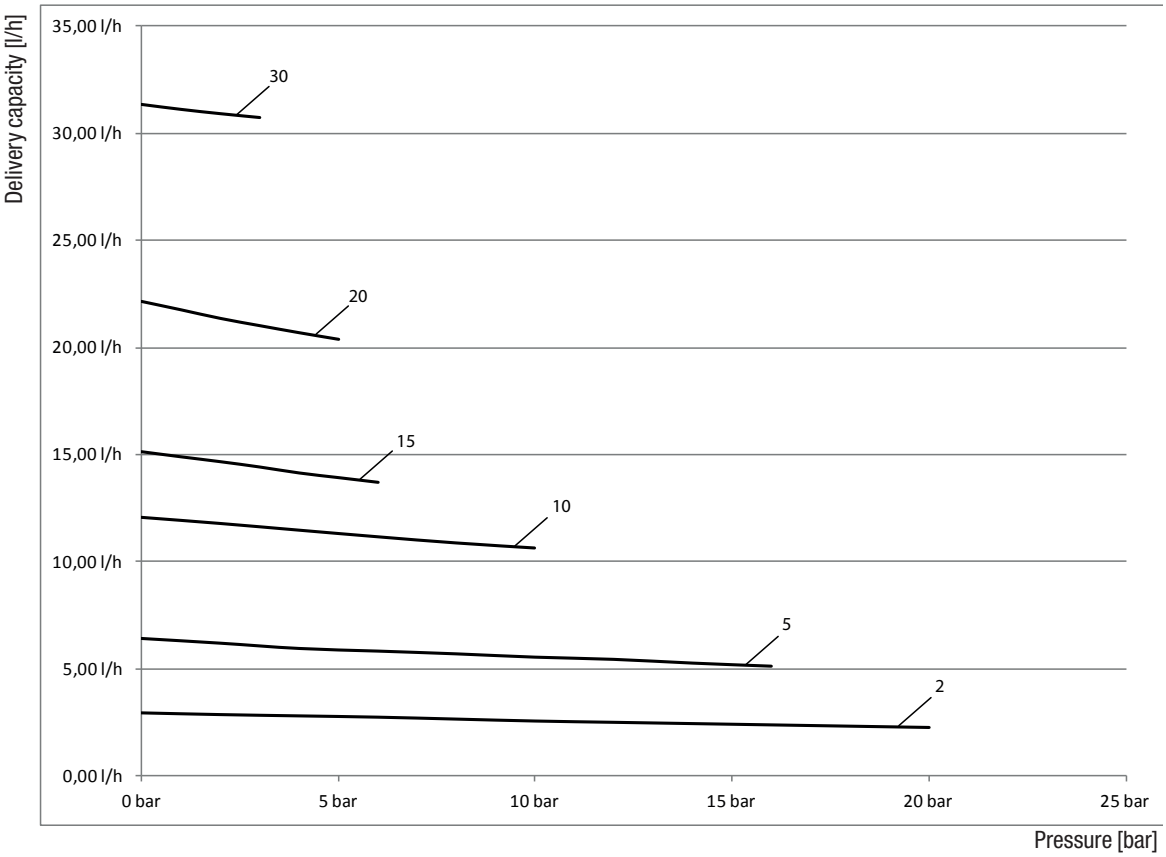

Fig. 57: Delivery characteristic curves MEMDOS SMART LK / LP 2 – 30

© Lutz-Jesco GmbH 2020

16 EU Declaration of Conformity

(DE) EU-Konformitätserklärung
Hiermit erklären wir, dass das nachfolgend bezeichnete Gerät aufgrund seiner Konzipierung und Bauart sowie in der von uns in Verkehr gebrachten Ausführung den einschlägigen grundlegenden Sicherheits- und Gesundheitsanforderungen der aufgeführten EG-Richtlinien entspricht. Bei einer nicht mit uns abgestimmten Änderung am Gerät verliert diese Erklärung ihre Gültigkeit.

(EN) EC Declaration of Conformity
We hereby certify that the device described in the following complies with the relevant fundamental safety and sanitary requirements and the listed EC regulations due to the concept and design of the version sold by us.
If the device is modified without our consent, this declaration loses its validity.

(FR) Déclaration de conformité CE
Nous déclarons sous notre propre responsabilité que le produit ci-dessous mentionné répond aux exigences essentielles de sécurité et de santé des directives CE énumérées aussi bien sur le plan de sa conception et de son type de construction que du modèle que nous avons mis en circulation.
Cette déclaration perdra sa validité en cas d'une modification effectuée sur le produit sans notre accord explicite.

(ES) Declaración de conformidad CE
Por la presente declaramos que, dados la concepción y los aspectos constructivos del modelo puesto por nosotros en circulación, el aparato mencionado a continuación cumple con los requisitos sanitarios y de seguridad vigentes de las directivas de la U.E. citadas a continuación.
Esta declaración será invalidad por cambios en el aparato realizados sin nuestro consentimiento.

(NL) EU-overeenstemmingsverklaring
Ondergetekende Lutz-Jesco GmbH, bevestigt, dat het volgende genoemde apparaat in de door ons in de handel gebrachte uitvoering voldoet aan de eis van, en in overeenstemming is met de EU-richtlijnen, de EU-veiligheidsstandaard en de voor het product specifieke standaard. Bij een niet met ons afgestemde verandering aan het apparaat verliest deze verklaring haar geldigheid.

Bezeichnung des Gerätes:	Schrittmotor-Membrandosierpumpe
Description of the unit:	Stepper Motor-driven Diaphragm Dosing Pump
Désignation du matériel:	Pompe doseuse à membrane entraînée par moteur pas à pas
Descripción de la mercancía:	Bomba dosificadora de membrana con motor paso a paso
Omschrijving van het apparaat:	Stappenmotor-Membraandoseerpomp
Typ: **Type:**	MEMDOS SMART 2 – 30
EU-Richtlinien: **EC directives:**	2006/42/EG, 2014/30/EU Die Schutzziele der Niederspannungsrichtlinie 2014/35/EU wurden gemäß Anhang I, Nr. 1.5.1 der Maschinenrichtlinie 2006/42/EG eingehalten. The protective aims of the Low Voltage Directive 2014/35/EU were adhered to in accordance with Annex I, No. 1.5.1 of the Machinery Directive 2006/42/EC.
Harmonisierte Normen: **Harmonized standards:**	DIN EN ISO 12100:2011-03, DIN EN 809:2012-10, DIN EN 61000-6-2:2005, DIN EN 61000-6-3:2007 + A1:2011
Dokumentationsbevollmächtigter: **Authorized person for documentation:**	Lutz-Jesco GmbH

Heinz Lutz
Geschäftsführer / Chief Executive Officer
Lutz-Jesco GmbH
Wedemark, 01.08.2016

Lutz-Jesco GmbH
Am Bostelberge 19
30900 Wedemark
Germany

© Lutz-Jesco GmbH 2020
Subject to technical changes.
201221

17 Declaration of no objection

Please copy the declaration, stick it to the outside of the packaging and return it with the device.

Declaration of no objection

Please fill out a separate form for each appliance!

We forward the following device for repairs:

Device and device type: ..... Part-no.: .....

Order No.: ..... Date of delivery: .....

Reason for repair: .....

.....

.....

Dosing medium

Description: ..... Irritating: ☐ Yes ☐ No

Properties: ..... Corrosive: ☐ Yes ☐ No

We hereby certify, that the product has been cleaned thoroughly inside and outside before returning, that it is free from hazardous material (i.e. chemical, biological, toxic, flammable, and radioactive material) and that the lubricant has been drained.

If the manufacturer finds it necessary to carry out further cleaning work, we accept the charge will be made to us.

We assure that the aforementioned information is correct and complete and that the unit is dispatched according to the legal requirements.

Company / address: ..... Phone: .....

..... Fax: .....

..... Email: .....

Customer No.: ..... Contact person: .....

Date, Signature: .....

© Lutz-Jesco GmbH 2020

18 Warranty claim

Warranty claim

Please copy and send it back with the unit!

If the device breaks down within the period of warranty, please return it in a cleaned condition with the complete warranty claim.

Sender

Company: ..... Phone: ..... Date: .....

Address: .....

Contact person: .....

Manufacturer order no.: ..... Date of delivery: .....

Device type: ..... Serial number: .....

Nominal capacity / nominal pressure: .....

Description of fault: .....

.....

.....

.....

.....

.....

.....

.....

Service conditions of the device

Point of use / system designation: .....

.....

.....

Accessories used (suction line etc.): .....

.....

.....

.....

.....

Commissioning (date): .....

Duty period (approx. operating hours): .....

Please describe the specific installation and enclose a simple drawing or picture of the chemical feed system, showing materials of construction, diameters, lengths and heights of suction and discharge lines.

© Lutz-Jesco GmbH 2020
Subject to technical changes.
201221

19 Index

A
Accessories 20
Alarm relay 28
Alarm relay output 24
Analog input
  Operating mode 37
Approved media temperature 13

B
Back-pressure valve 20

C
Calibrating the dosing pump 34
Calibration 34
Cemented connection 19
Clean suction and discharge valves 44
Clearing the stroke buffer 37
Commissioning the dosing pump 33
Connection sockets 22
Contact water meter 20
Control 26
Control elements 10
Conveying characteristics 11

D
Declaration of no objection 50
Decommissioning the dosing pump 42
Default settings
  Resetting to factory settings 31
Delivery capacity data 12
Delivery characteristic curves 48
Design of the system 17
Device revision 7
Diaphragms
  Replace 44
  Spare parts set 47
Dimensioned drawings 14
Dimensions 14
Disposal of old equipment 42
Dosing head
  Alignment 18
  Design 9
  Spare parts 47
Dosing head venting facility 19
Dosing media
  Approved media temperature 13
  Prohibited dosing media 7

E
Electrical installation 22
Electrical specifications 13
EU Declaration of Conformity 49
External On / Off via Release input 41
Ext start (batch mode) 39

F
Foreseeable misuse 7
Function description 10

G
General warnings 5
Glue-in connection 19

H
Handling instructions
  Marking 4
Hazards due to non-compliance with the safety instructions 6
Hydraulic accessories 20
Hydraulic connections 18
Hydraulic installations 17

I
Information about the dosing pump 32
Initial start-up
  Menu settings 27
Injection nozzle 20
Inputs of the control unit 22
Installation 16
  electrical 22
  hydraulic 17
Installing the Dosing Pump 16
Intended purpose 7
Intended use 7
Interval (batch mode) 39

L
Language 28
Leakage drain 19
Level input
  Configuration of the control unit 29
  Connection 24
Level monitoring 21

M
Main menu 27
Maintenance 43
Maintenance intervals 43
Menu navigation
  Explanation 26
Menu settings at initial commissioning 27

N
Network
  Network mode 41
Notes for the Reader 4

O
Operating conditions and limits 12

 © Lutz-Jesco GmbH 2020

Operating modes 35
Analog input 37
Batch mode 38
Explanation of the icons 27
Manual mode 35
Network mode 41
Pulse input 35
Operation 33
Operator controls of the control unit 26
Output (pulse input mode) 36

P

Personnel qualification 6
Pressure-relief valve 20
Priming aid 21
Product description 9
Product warranty 7
Programming the dosing procedures 40
Prohibited dosing media 7
Pulsation dampener 20
Pulse input
Connection 23
Operating mode 35

R

Rating plate 10
Release code 29
Release input
Configuration of the control unit 29
Connection 23

S

Safety 5
Safety code 30
Scaling 34
Scaling the delivery capacity 34
Scope of delivery 9
Set up information 16
Shutdown 42
Shutting down in an emergency 42
Signal words
Explanation 4
Slow Motion
Setup 31
Spare parts 47
Specialist staff 6
Start/Stop (batch mode mode) 39
Start-up 33
Storage 42
Stroke feedback output 23
Strokes (pulse input) 36
Structure of the dosing pump 9
Suction pressure regulator 21
Suspensions 21
System piping 17
System setup 27

T

Technical data 12
Temperatures
Approved ambient temperature 12
Approved media temperature 13
Tighten up dosing head bolts 43
Timer (batch mode) 39
Transportation 42
Troubleshooting 45

U

Units 28

V

Venting 33
Venting the dosing pump 33

W

Wall bracket 16
Wall mounting 16
Warnings
General warnings 5
Marking 4
Warning sign
Explanation 4
Warranty claim 51
Water meter 20
Water meter (pulse input) 36
Working in a safety-conscious manner 6

© Lutz-Jesco GmbH 2020
Subject to technical changes.
201221

Lutz-Jesco GmbH

Am Bostelberge 19
D-30900 Wedemark

Phone: +49 5130 5802-0
info@lutz-jesco.com
www.lutz-jesco.com

Operating instructions
MEMDOS SMART LK/LP

Copyright 2020 by Lutz-Jesco GmbH